OPERATION OF DUAL KEY ILD

UN-LOCK

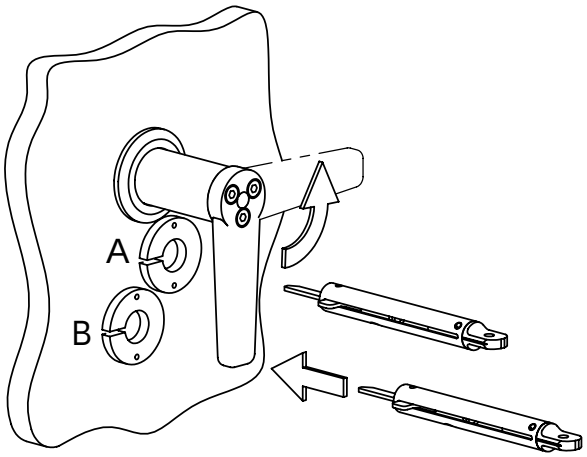

1. ROTATE HANDLE 90° CCW & INSERT KEYS

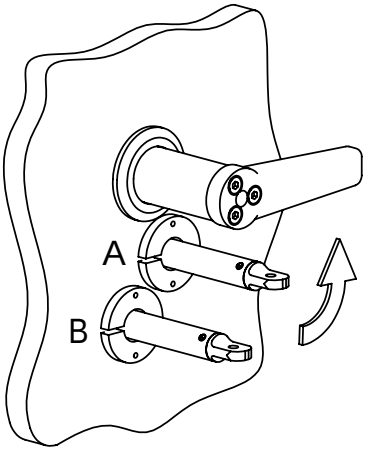

2. ROTATE KEYS 180° CCW
(NOTE: KEYS CANNOT BE REMOVED)

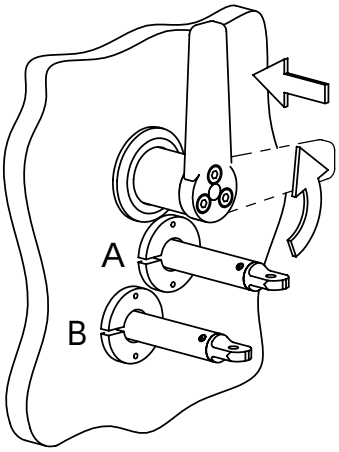

3. PUSH IN HANDLE UNTIL IT STOPS
& ROTATE HANDLE 90° CCW TO
DISENGAGE LOCKING BOLT

LOCK

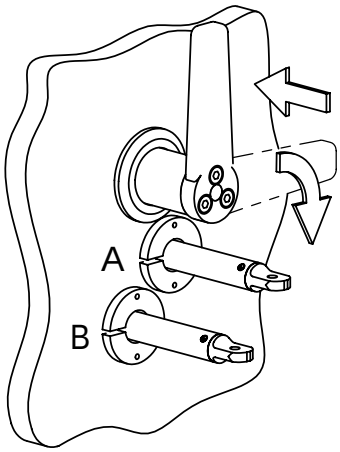

1. PUSH IN HANDLE & ROTATE HANDLE
90° CW TO ENGAGE LOCKING BOLT

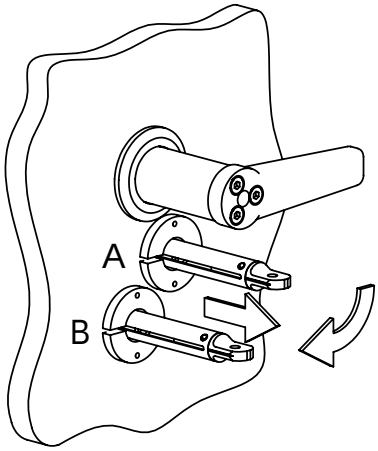

2. ROTATE KEYS 180° CW &
REMOVE KEYS TO SECURE LOCK

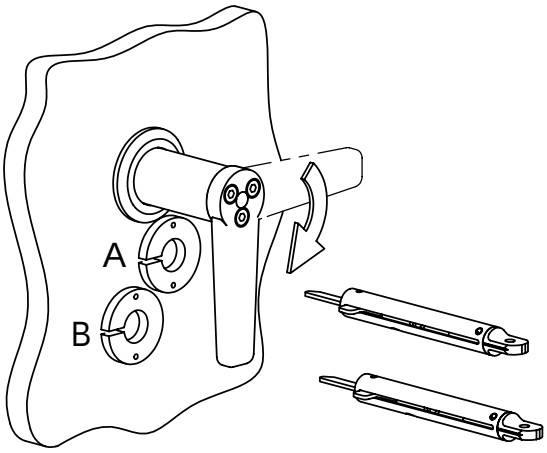

3. ROTATE HANDLE 90° CW

Installation coordinator (805-982-5349)
http://locks.nfesc.navy.mil