STANDARD PLANS
FOR
HIGH SECURITY HASPS
AND
PHYSICAL SECURITY EQUIPMENT ASHORE

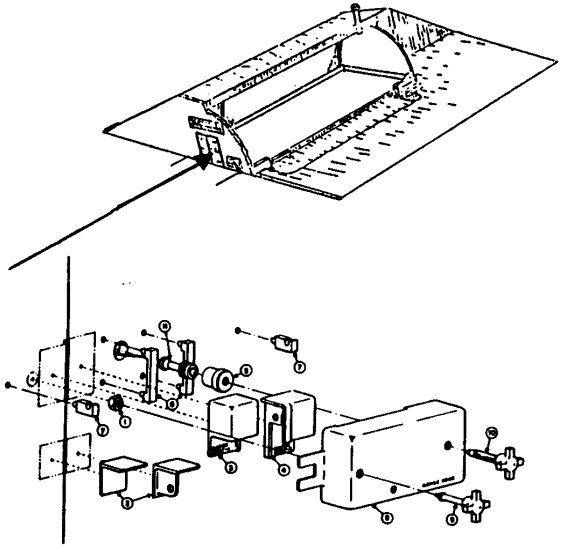

by

Naval Weapons Support Center
(NAVWPNSUPPCEN)
Crane, Indiana 47522

ACTIVITY REQUESTS FOR HIGH SECURITY HASPS, LOCKS, SAFES, ETC

Backround: NAVWPNSUPPCEN Crane (Code-208) is in the business of furnishing physical security hardware to activities and ships for the Arms, Ammunition and Explosives (AA&E) and Nuclear Weapons Security Programs. However, recent requests from the above type units for this hardware and the fact that over 50 percent of the ammunition and weapons in storage do not qualify for the level of protection we can provide, make it necessary that a policy be established regarding validation of requests.

Policy: Henceforth, an activity wishing hardware should forward a message or leter to NAVWPNSUPPCEN Crane (Code 208) stating the following:

a. Requesting Activity

b. Building Number or Magazine Number
(where hasps is to be installed)

c. Risk Category being stored

d. Style* of Hasp or type of Door
(correlate to building number)

e. Complete Shipping Address
(include ATTN: name and code)

f. Desired Delivery Date
(normal shipping time: 2-3 weeks)

g. A Point of Contact, with phone number

Discussion: the above information will allow us to validate a request, prioritize its filling, and initiate shipment as quickly as possible to meet security requirements.

Forward Requests to:

Commander
Code 3046
NAVSURFWARCENDIV
300 Highway 361
Crane, IN 47522-5001

For Additional Assistance, Contact Code 208 Representative:

Mr. Bob Price
Mr. Jeff Solliday

Telephone: Commercial (812) 854-8560/5840
DSN 482-5860/5840

*There are two styles of Landbase hasps. See Hasp Style Determination for correlation of style to door type.

HASP STYLE DETERMINATION

HIGH SECURITY HASP
STYLE 0957

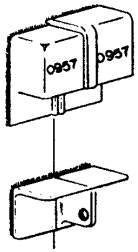

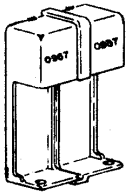

STYLE 0957
MK-2 MOD-9

TYPE I WITHOUT ASTRAGAL

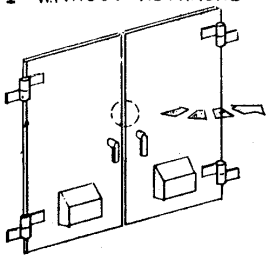

WITH ASTRAGAL

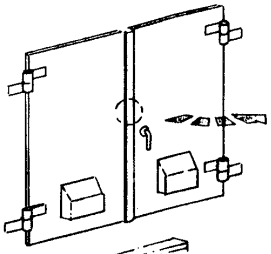

TYPE III SINGLE DOOR HINGED RIGHT

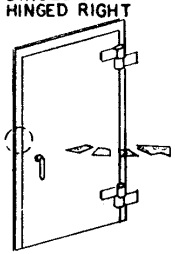

TYPE VI SLIDING DOOR MOVING RIGHT

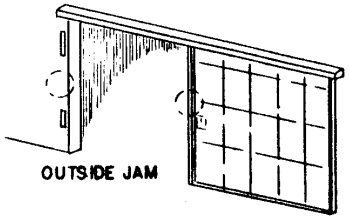

TYPE IX DOUBLE SLIDING DOORS

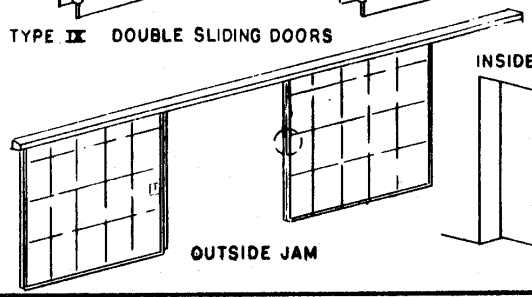

TYPE XI SINGLE DOOR HINGED LEFT

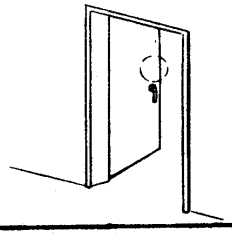

TYPE XIII SLIDING DOOR MOVING RIGHT

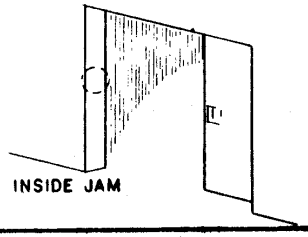

HIGH SECURITY HASP
STYLE 0958

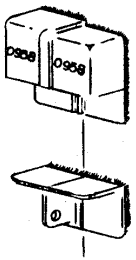

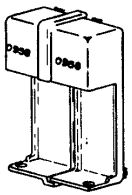

STYLE 0958
MK-2 MOD-9

TYPE II WITHOUT ASTRAGAL

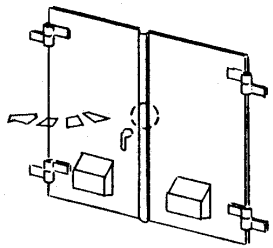

WITH ASTRAGAL

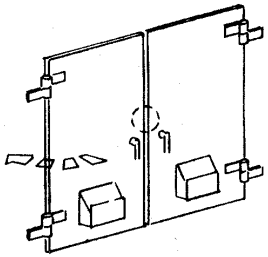

TYPE IV SINGLE DOOR HINGED LEFT

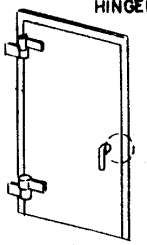

TYPE V SLIDING DOOR MOVING LEFT

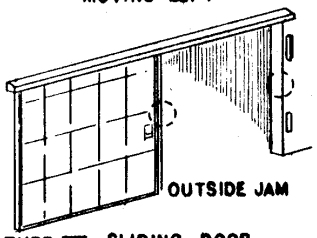

TYPE IX DOUBLE SLIDING DOORS
(SEE ABOVE)

TYPE X SINGLE DOOR HINGED RIGHT

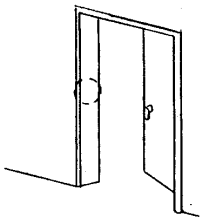

TYPE XII SLIDING DOOR MOVING LEFT

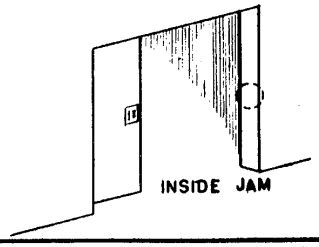

NOTE:-

1. ITEM 3 TO BE FURNISHED BY CUSTOMER.

	A	ADDED 1/2 FILLERS TO #1 & #2 TITLE REVISED	5-78

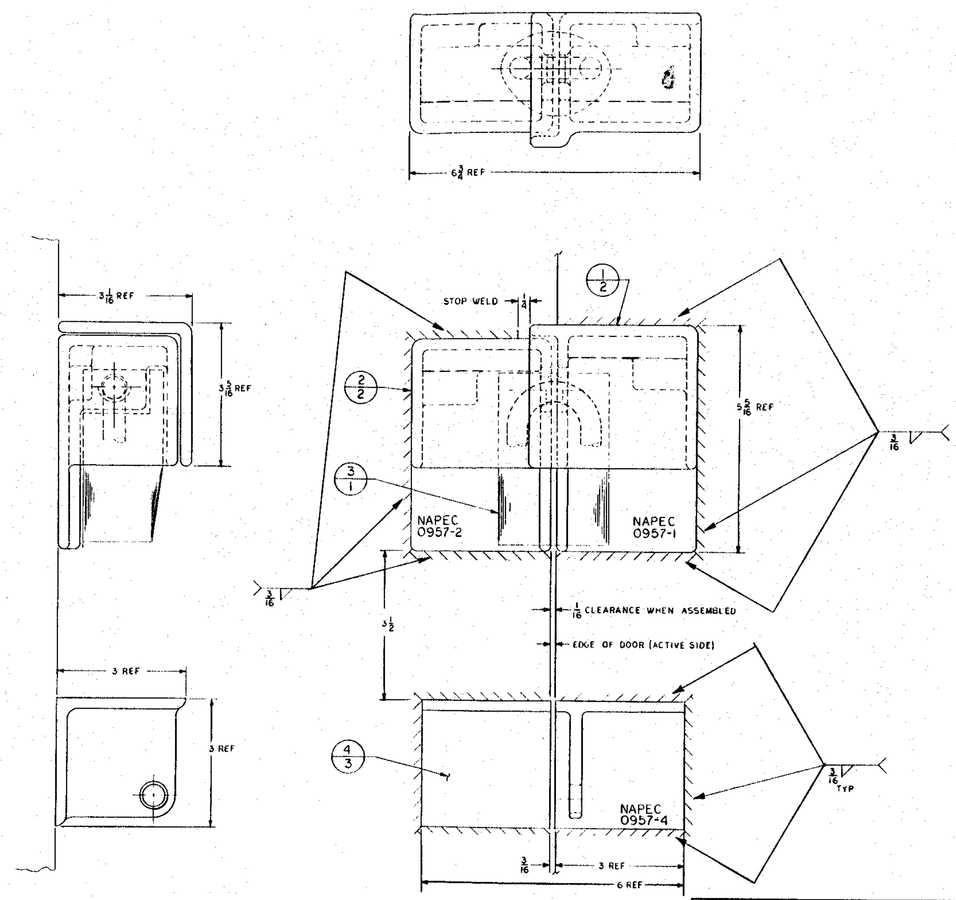

ITEM	NOMENCLATURE	NOTE	QTY	REMARKS
4	BOTTOM ATTACK SHIELD		1	SEE DETAIL
3	PADLOCK	1	1	REF.
2	CLASP		1	SEE DETAIL
1	COVER		1	SEE DETAIL

APPROVED 21 Dec 1976

G.J. SALLADE 7/77

GJS & JEL 10-1-76

SCALE 1/1 SIZE F

HIGH SECURITY HASP. HINGED OR SLIDING HORIZONTAL, RH MK 2 MOD 8

ASSEMBLY

NAPEC 0957

SHEET 1 OF 3

A

REVISIONS				
4EF	A	ADDED 1/2 SG FILLERS TITLE REVISED	5-78	

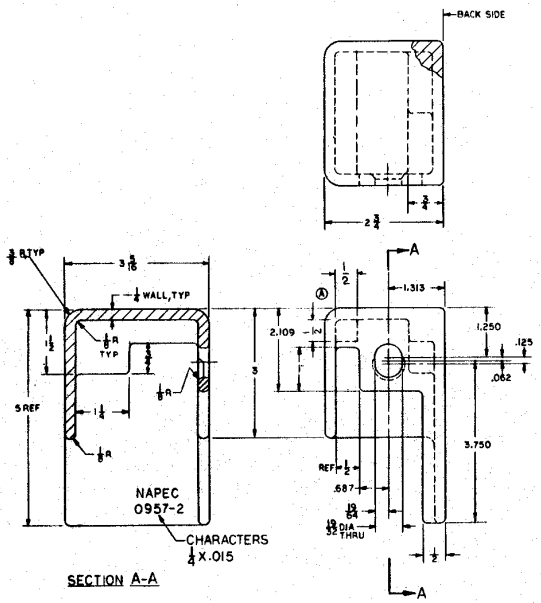

SECTION A-A

(2) OF NAPEC DWG NO. 0957
NAME - CLASP
MATL - INVESTMENT CASTING/MIL-C-6021 CL-2B
STAINLESS STEEL CA-6NM

HEAT TREAT - RC 36/40

SURFACE FINISH - NAS-823/C-25

INSP - ZYGLO PER MIL SPEC-I-6866

* SPECIAL NOTE:
SEE RECOMMENDED LINEAR TOLERANCES.

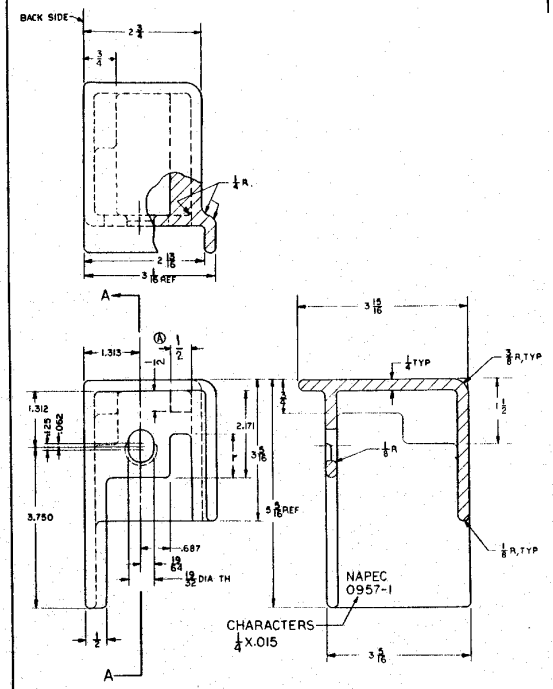

SECTION A-A

(1) OF NAPEC DWG NO. 0957
NAME - COVER
MATL - INVESTMENT CASTING / MIL-C-6021 CL-2B
STAINLESS STEEL CA-6NM

HEAT TREAT - RC-36/40

SURFACE FINISH - NAS-823/C-25
INSP - ZYGLO PER MIL-SPEC-I-6866

* SPECIAL NOTE:
SEE RECOMMENDED LINEAR TOLERANCE.

* RECOMMENDED LINEAR TOLERANCE

DIMENSION	NORMAL
UP TO 1/2"	±.007
UP TO 1"	±.010
UP TO 2"	±.013
UP TO 3"	±.016
UP TO 4"	±.019
UP TO 5"	±.022
UP TO 6"	±.025

APPROVED 23 Dec 1976
Alan E. Peterson

SCALE FULL | SIZE F

HIGH SECURITY HASP
HINGED OR SLIDING
HORIZONTAL RH
MK 2 MOD 8

DETAILS

DEPARTMENT OF THE NAVY
NAVAL ORDNANCE SYSTEMS COMMAND
NAVAL AMMUNITION PRODUCTION ENGINEERING CENTER
CRANE, INDIANA

NAPEC DRAWING NO. 0957
SHEET 2 OF 3
A

NOTICE: THE PROPERTY AND DESIGN DETAIL OF THE DRAWING HERE REVIEWED IS THE NAVAL AERONAUTICAL PROCESSING ENGINEERING CENTER AND ARE UNITED STATES GOVERNMENT PROPERTY.

REVISIONS				
ZONE	LTR.	DESCRIPTION	DATE	APPROVAL
	A	TITLE REVISED	5-78	

NAPEC DRAWING NO. 0957 SHEET 3 OF 3 A

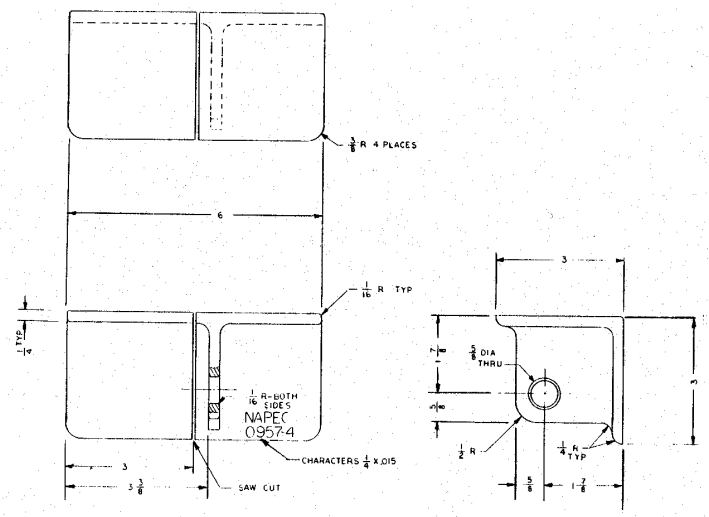

(4) OF NAPEC DWG NO. 0957
NAME: BOTTOM ATTACK SHIELD
MATL: INVESTMENT CASTING MIL-C-6021 CL 2B
STAINLESS STEEL CA 6NM

HEAT TREAT: RC 36/40

SURF REQT: NAS 823/C-25
SPECIAL NOTE: LINEAR TOLERANCES

UP TO	1/2"	±.007
" "	1"	±.010
" "	2"	±.013
" "	3"	±.016
" "	4"	±.019
" "	5"	±.022
" "	6"	±.025

INSP: ZYGLO PER MIL SPEC - I-6866 CL 2B

SCALE: FULL	SIZE: F	APPROVED 23 Dec 1976	HIGH SECURITY HASP HINGED OR SLIDING HORIZONTAL RH MK 2 MOD 8
			DETAIL
		5/9/77 12-76	
		5 M 11-3	

DEPARTMENT OF THE NAVY
NAVAL ORDNANCE SYSTEMS COMMAND
NAVAL AERONAUTICAL PROCESSING ENGINEERING CENTER
GRAND, INDIANA

NAPEC DRAWING NO. 0957 SHEET 3 OF 3 A

NOTICE: [illegible]

NAPEC 0958 SHEET 1 OF 3 A

NOTE:-
1. ITEM 3 TO BE FURNISHED BY CUSTOMER

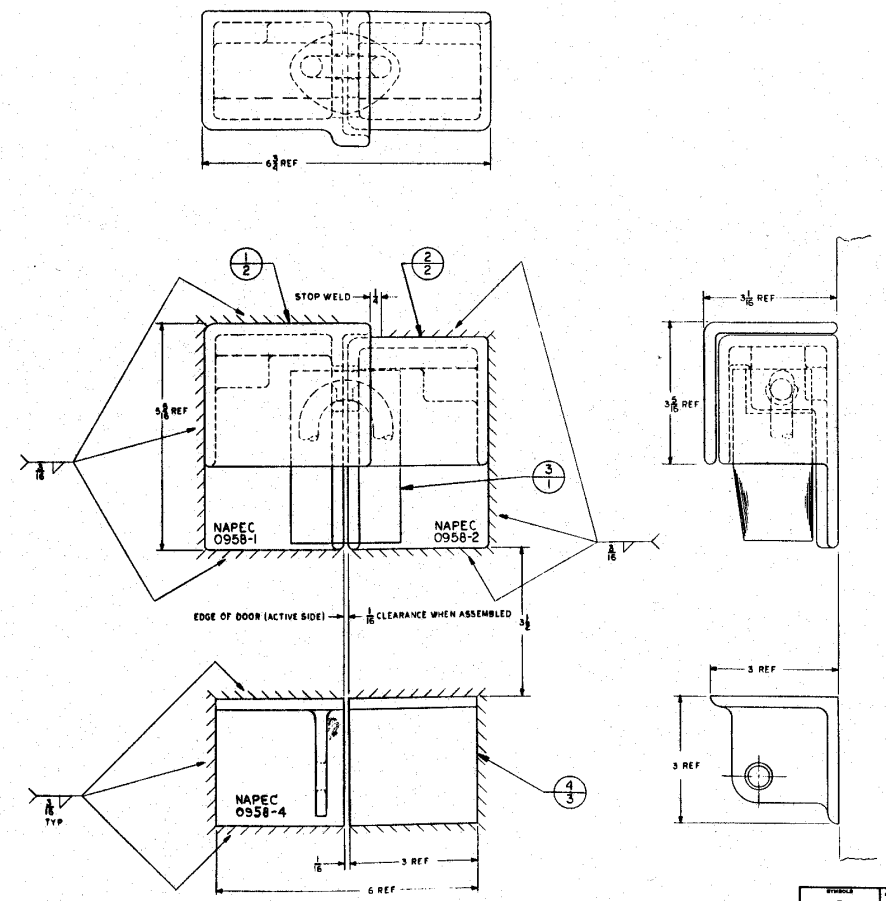

ZONE	LTR	DESCRIPTION	DATE	APPROVAL
	A	ADDED MATL TO 1 & 2 TITLE REVISED	5-78	

ITEM	NOMENCLATURE	NOTE	QTY	REMARKS
4	BOTTOM ATTACK SHIELD		1	SEE DETAIL
3	PADLOCK	1	1	REF.
2	CLASP		1	SEE DETAIL
1	COVER		1	SEE DETAIL

HIGH SECURTY HASP
HINGED OR SLIDING
HORIZONTAL LH
MK 2 MOD 8

ASSEMBLY

DEPARTMENT OF THE NAVY
NAVAL ORDNANCE SYSTEMS COMMAND
NAVAL AMMUNITION PRODUCTION ENGINEERING CENTER
CRANE, INDIANA

NAPEC 0958 SHEET 1 OF 3 A

SCALE 1/1 F

APPROVED 2 3 [illegible] 1976

3,870 12-76
G.J.S & JEL 10-6-76

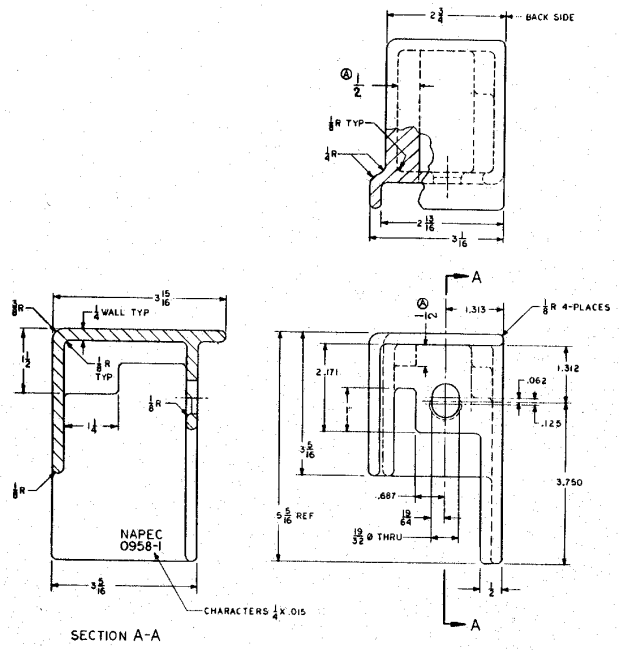

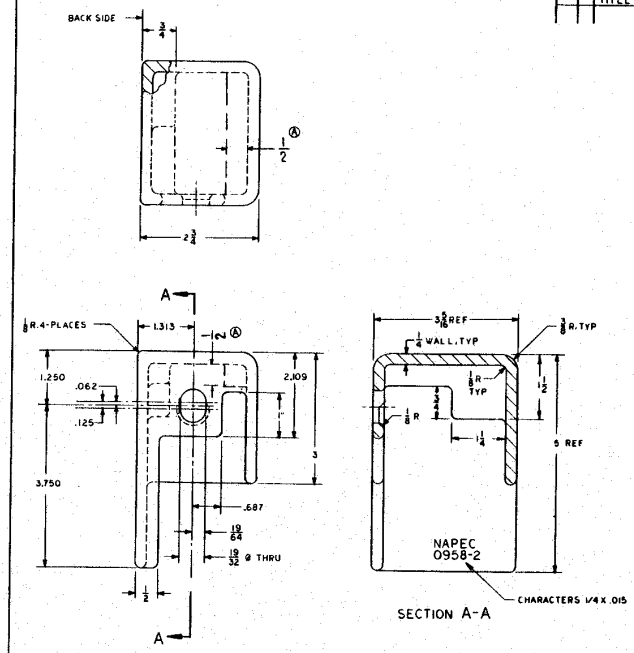

(1) OF NAPEC DWG NO: 0958
NAME: COVER
MATL: INVESTMENT CAST/MIL-C-6021 CL-2B
STAINLESS STEEL CA-NM
HEAT TREAT: RC 36-40
SURFACE FINSH: NAS-823/C-25
INSP: ZYGLO PER MIL-SPEC-I-6866
SPECIAL NOTE:
SEE RECOMMENDED LINEAR TOLERANCE

(2) OF NAPEC DWG NO: 0958
NAME: CLASP
MATL: INVESTMENT CAST/MIL-C-6021 CL-2B
STAINLESS STEEL CA-6NM
HEAT TREAT: RC 36/40
SURFACE FINSH: NAS 823/C-25
INSP ZYGLO PEP MIL-SPEC-I-6866
SPEC NOTE:
SEE RECOMMENDED LINEAR TOLERANCE

RECOMMENDED LINEAR TOLERANCE

DIMENSION	NORMAL
UP TO 1/2"	±.007
UP TO 1"	±.010
UP TO 2"	±.013
UP TO 3"	±.016
UP TO 4"	±.019
UP TO 5"	±.022
UP TO 6"	±.025

REVISIONS			
HGE	A	ADDED 1/2 SQ FILLERS TITLE REVISED	5-78

HIGH SECURITY HASP
HINGED OR SLIDING
HORIZONTAL LH
MK 2 MOD 8

DETAILS

DEPARTMENT OF THE NAVY
NAVAL AVIONICS CENTER
INDIANAPOLIS, INDIANA

NAPEC 0958 SHEET 2 OF 3 A

NOTICE: THE INFORMATION HEREIN IS PROPRIETARY TO THE NAVY. NOT TO BE REPRODUCED OR DISCLOSED TO OTHERS WITHOUT WRITTEN PERMISSION.

ZONE	LTR.	DESCRIPTION	DATE	APPROVAL
	A	TITLE REVISED	5-78	

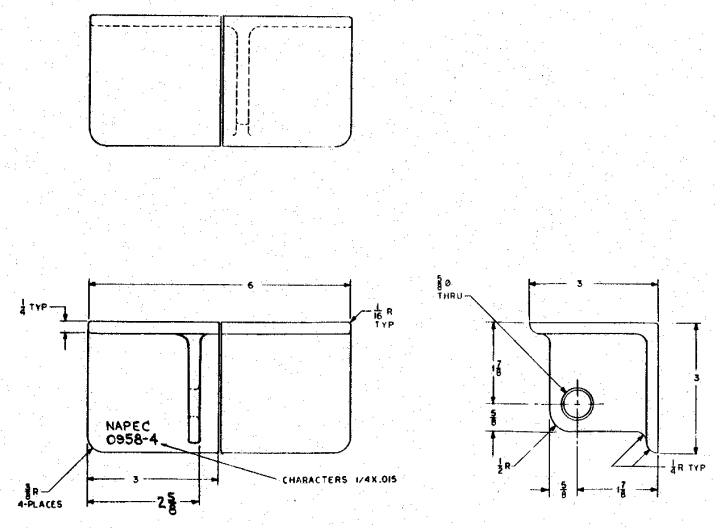

(4) OF NAPEC DWG NO: 0958
NAME: BOTTOM ATTACK SHIELD
MATL: INVESTMENT CASTING/MIL-C-6021 CL-2B
STAINLESS STEEL CA-6NM
HEAT TREAT: RC 36/40
SURF REQT: NAS 823/C-25
SPCL NOTE: LINEAR TOLERANCES

UP	TO	1/2	±.007
"	"	1"	±.010
"	"	2	±.013
"	"	3	±.016
"	"	4	±.019
"	"	5	±.022
"	"	6	±.026

INSP: ZYGLO PER MIL-SPEC-I 6866

APPROVED 23 Dec 1976	HIGH SECURITY HASP HINGED OR SLIDING HORIZONTAL LH MK 2 MOD 8	DEPARTMENT OF THE NAVY	
E J SALLADE 12-76	DETAIL	NAPEC DRAWING NO. 0958	A
SCALE: 1/1	SIZE F	SHEET 3 OF 3	

NOTICE: THIS DRAWING IS THE PROPERTY OF THE NAVY AND IS NOT TO BE REPRODUCED OR DISCLOSED WITHOUT WRITTEN PERMISSION.

NAPEC DRAWING NO. 0958 SHEET 3 OF 3 A

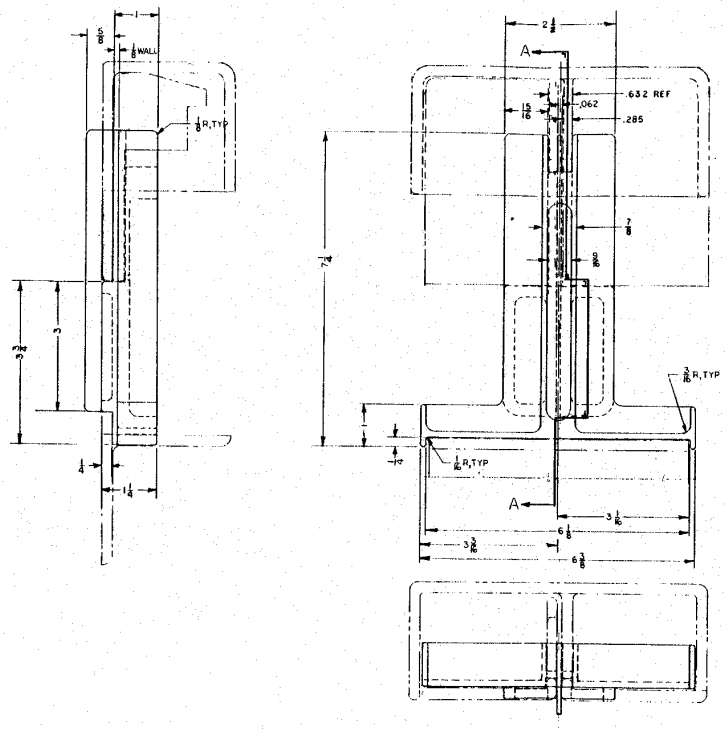

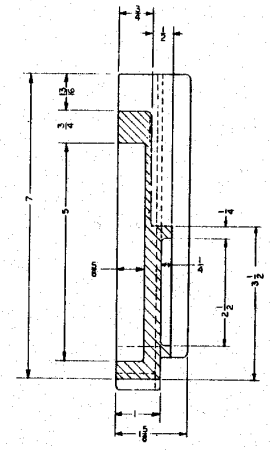

SECTION A-A

(1) OF NAPEC DWG NO 0961
NAME: MOUNTING JIG
MATL: INVESTMENT CASTING
STAINLESS STEEL 304L (CF-3)

SURF REQT: NAS-823/C-25
SPCL NOTE: LINEAR TOLERANCES

UP TO 1/2	±.007
" " 1	±.010
" " 2	±.013
" " 3	±.016
" " 4	±.019
" " 5	±.022

ITEM	NOMENCLATURE	QTY	NOTE	REMARKS
1	MOUNTING JIG	1		

HIGH SECURITY
HASP HINGED
MK 2 (MOD 7)

MOUNTING JIG

ASSEMBLY & DETAIL

DEPARTMENT OF THE NAVY
NAVAL SEA
SYSTEMS COMMAND
NAVAL AMMUNITION PRODUCTION
ENGINEERING CENTER
CRANE, INDIANA

NAPEC DRAWING NO. 0961
SHEET 1 OF 1

SCALE 1:1
DRAWN

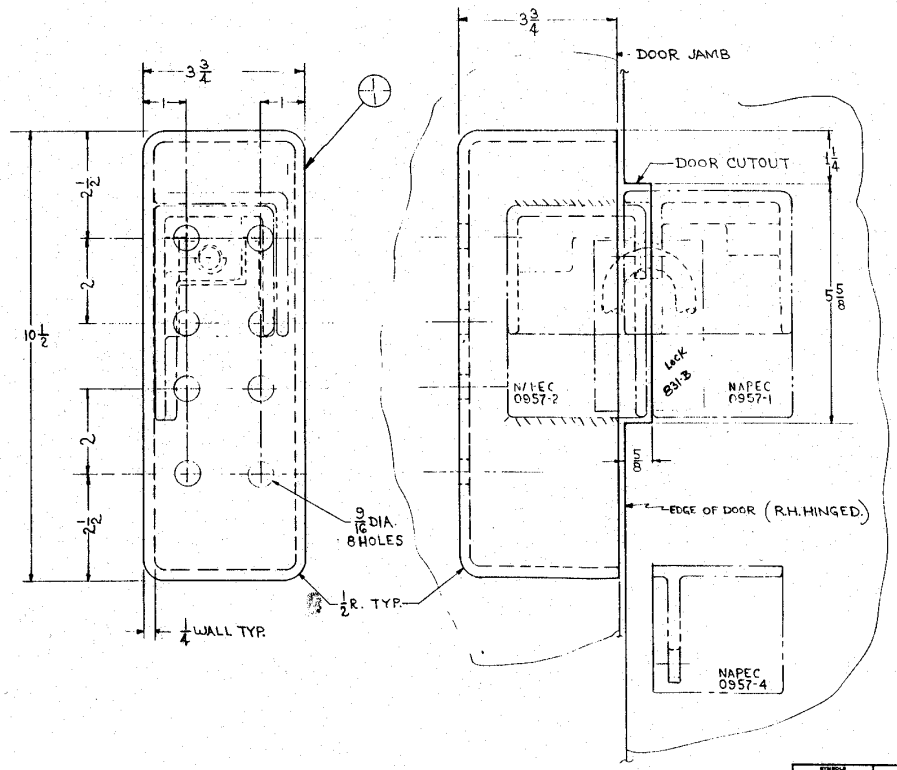

R.H. INSTALLATION SHOWN (0957)
L.H. OPPOSITE (0958)

(1) UNIVERSAL MTG. BOX
MAT'L. STAINLESS STEEL TYPE 316
AMS 5360 OR CF8M ASTMA-296
STANDARD TOLERANCES for INVESTMENT
CASTINGS, LINEAR & FLATNESS.

SYMBOLS	SEE NOTE	APPROVED 24 May 1978	WALL MOUNTING BOX for SINGLE DOOR & 0957 or 0958 HASP.
SCALE 1:1	SIZE F	G.J. SALLADE 5-78	ASSY. & DETAIL

DEPARTMENT OF THE NAVY
NAVAL SEA
SYSTEMS COMMAND
NAVAL AMMUNITION PRODUCTION
ENGINEERING CENTER
CRANE, INDIANA

NAPEC DRAWING NO. 1286
SHEET 1 OF 1

NAPEC DRAWING NO. 1286
SHEET 1 OF 1

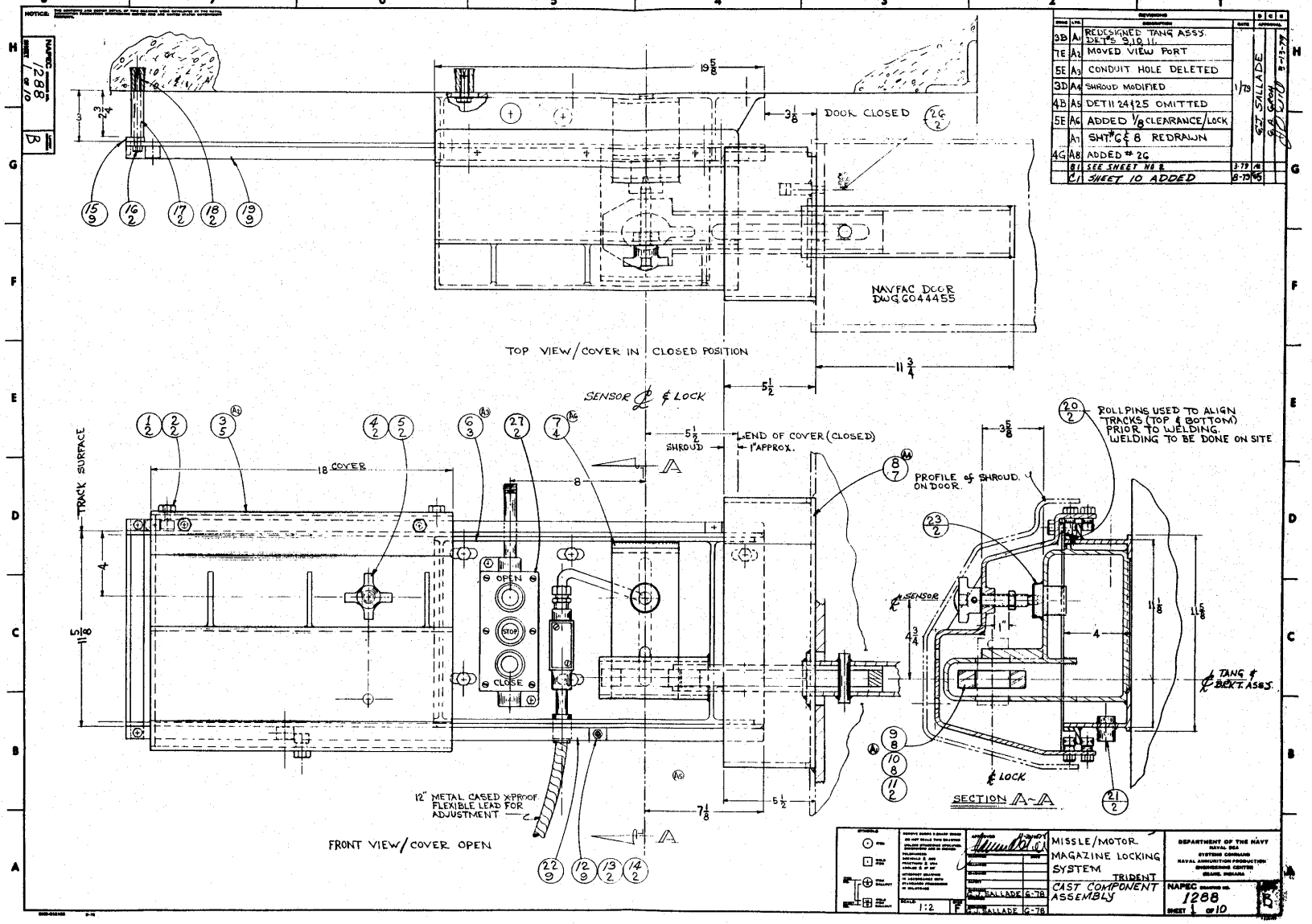

NOTICE:
NAPEC 1288 SHEET 1 of 10
B
REVISIONS
3B A1 REDESIGNED TANG ASSY. DET'S 9,10,11.
7E A2 MOVED VIEW PORT
5E A3 CONDUIT HOLE DELETED
3D A4 SHROUD MODIFIED
4B A5 DET'S 24 & 25 OMITTED
5E A6 ADDED 1/8 CLEARANCE/LOCK
A7 SHT. #6 & 8 REDRAWN
4G A8 ADDED #26
B1 SEE SHEET NO 2
C1 SHEET 10 ADDED
1/79
G.J. SALLADE
3-13-79
DOOR CLOSED
NAVFAC DOOR DWG 6044455
TOP VIEW/COVER IN CLOSED POSITION
SENSOR ℄ & LOCK
END OF COVER (CLOSED)
SHROUD
1" APPROX.
18 COVER
TRACK SURFACE
OPEN
STOP
CLOSE
12" METAL CASED X-PROOF FLEXIBLE LEAD FOR ADJUSTMENT
FRONT VIEW/COVER OPEN
PROFILE of SHROUD ON DOOR
ROLLPINS USED TO ALIGN TRACKS (TOP & BOTTOM) PRIOR TO WELDING. WELDING TO BE DONE ON SITE
℄ SENSOR
℄ TANG & BRKT. ASSY.
℄ LOCK
SECTION A-A
MISSLE/MOTOR MAGAZINE LOCKING SYSTEM
TRIDENT
CAST COMPONENT ASSEMBLY
G.J. SALLADE 6-78
1:2
DEPARTMENT OF THE NAVY
NAVAL SEA SYSTEMS COMMAND
NAVAL AMMUNITION PRODUCTION ENGINEERING CENTER
CRANE, INDIANA
NAPEC 1288
SHEET 1 OF 10
B

NAPEC 1288 SHEET 2 OF 10 REV B

NOTICE: THE INFORMATION AND DESIGN DETAILS OF THIS DRAWING HAVE DEVELOPED AT THE NAVAL ORDNANCE LABORATORY WHICH HAS GRANTED AND ACCEPTED SYSTEM ENGINEERING RESPONSIBILITY.

REVISIONS							
ZONE	LTR	DESCRIPTION	DATE	APPROVAL			
3 F	A5	DELETE 24 & 25	1-79				
3C	B	1 WAS HINGE PIN 1/2 Ø X 4-1/2 L COAT/ANTI-SEIZE LOCTITE #67	3-79				

ITEM	DESCRIPTION	REQD	MATL	SIZE	REMARKS
27	CONTROL B.B. (3)	1	STD	CUTLER HAMMER NAD#10250T NEMA 4 & 13	
26	STAPLE	1	SST	NAPEC 0963-1	GFM
25	DOWEL	1	STD	1/4 DIA X 1" LG.	
24	RINGS	1	SST	SEE DETAIL	
23	SENSOR BODY	1	SST	NAVALEX #284G9P1	GFM
22	TRACK, BOTTOM	1	SST	⌋ 1/4 X 1 X 1 X 38	
21	COUPLING STR.	1	SST	1/2 NPT	
20	ROLL PIN	6	SST	1/4 X 1/2 LG	
19	TRACK TOP	1	SST	⌋ 1/4 X 1 X 1 X 38	
18	ANCHORS	2	STD	3/8-16 X 2	RED HEAD EXPANSION #747
17	STANDOFF	2	SST	SCH #40 X 2 3/8 LG.	
16	HEX HD BOLT	2	SST	3/8-16NC 2 X 4 LG	
15	SPACER	1	SST	⌋ 1/4 X 1 X 1 X 13 1/4	
14	HEX-NUT	4	SST	1/4-20NC-2	LOCKTITE "NUT LOCK" @ ASSY.
13	HEX-HD BOLT	4	SST	1/4-20NC-2 X 1 1/2 LG	
12	STOP BLOCK	4	VULCANIZE	SEE DETAIL	60/90 DUROMETER BLACK
11	STOP PIN	1	SST	3/4 DIA X 3 L	
10	BRACKET	1	SST	SEE DETAIL	
9	TANG	1	SST	SEE DETAIL	
8	SHROUD	1	SST	SEE DETAIL	
7	LOCK & SENSOR	1	SST	SEE DETAIL	
6	MAIN HOUSING	1	SST	SEE DETAIL	
5	HEX-NUT	1	SST	3/4-10 NC-2	LOCKTITE "NUT LOCK" @ ASSY.
4	JACK SCREW	1	SST	NAVALEX DWG #2847140	GFM
3	COVER	1	SST	SEE DETAIL	
2	HEX-NUT	8	SST	3/8-24UNF-2	LOCKTITE GRADE H @ ASSY.
1	CAM FOLLOWER	8	STD	CTA-21-X 3/4 Ø X 1/2	SMITH DIV. of ABC GARWOOD N.J.

APPROVED 11-20-78 [signature]

MISSLE/MOTOR MAGAZINE HASP

STOCK LIST

DEPARTMENT OF THE NAVY
NAVAL SEA SYSTEMS COMMAND
NAVAL AMMUNITION PRODUCTION ENGINEERING CENTER
GRANE, INDIANA

NAPEC DRAWING NO. 1288 SHEET 2 OF 10 REV B

SCALE — SIZE F

DRAWN B.J. SALLADE 6/78

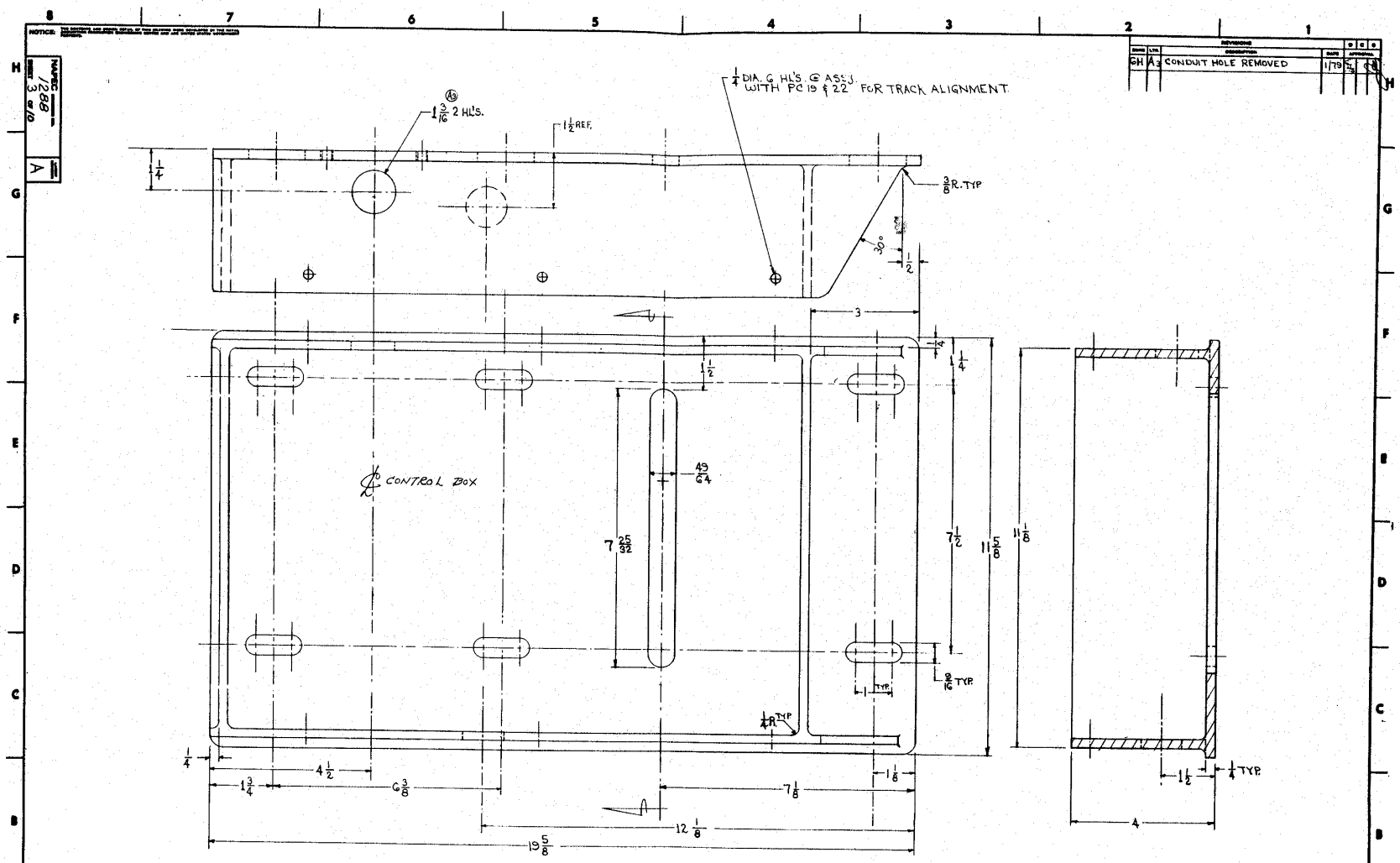

(G) MAIN HOUSING
CAST STAINLESS 316 (CF8M)
* .005 IN./IN. GENERAL TOLERANCE

REVISIONS				
SYMB	LTR	DESCRIPTION	DATE	APPROVAL
GH	A	CONDUIT HOLE REMOVED	1/79	

MISSLE MOTOR MAGAZINE HASP	DEPARTMENT OF THE NAVY NAVAL SEA SYSTEMS COMMAND NAVAL AMMUNITION PRODUCTION ENGINEERING CENTER CRANE, INDIANA		
MAIN HOUSING DETAIL	NAPEC DRAWING NO. 1288 SHEET 3 OF 10	A	

SCALE 1:1

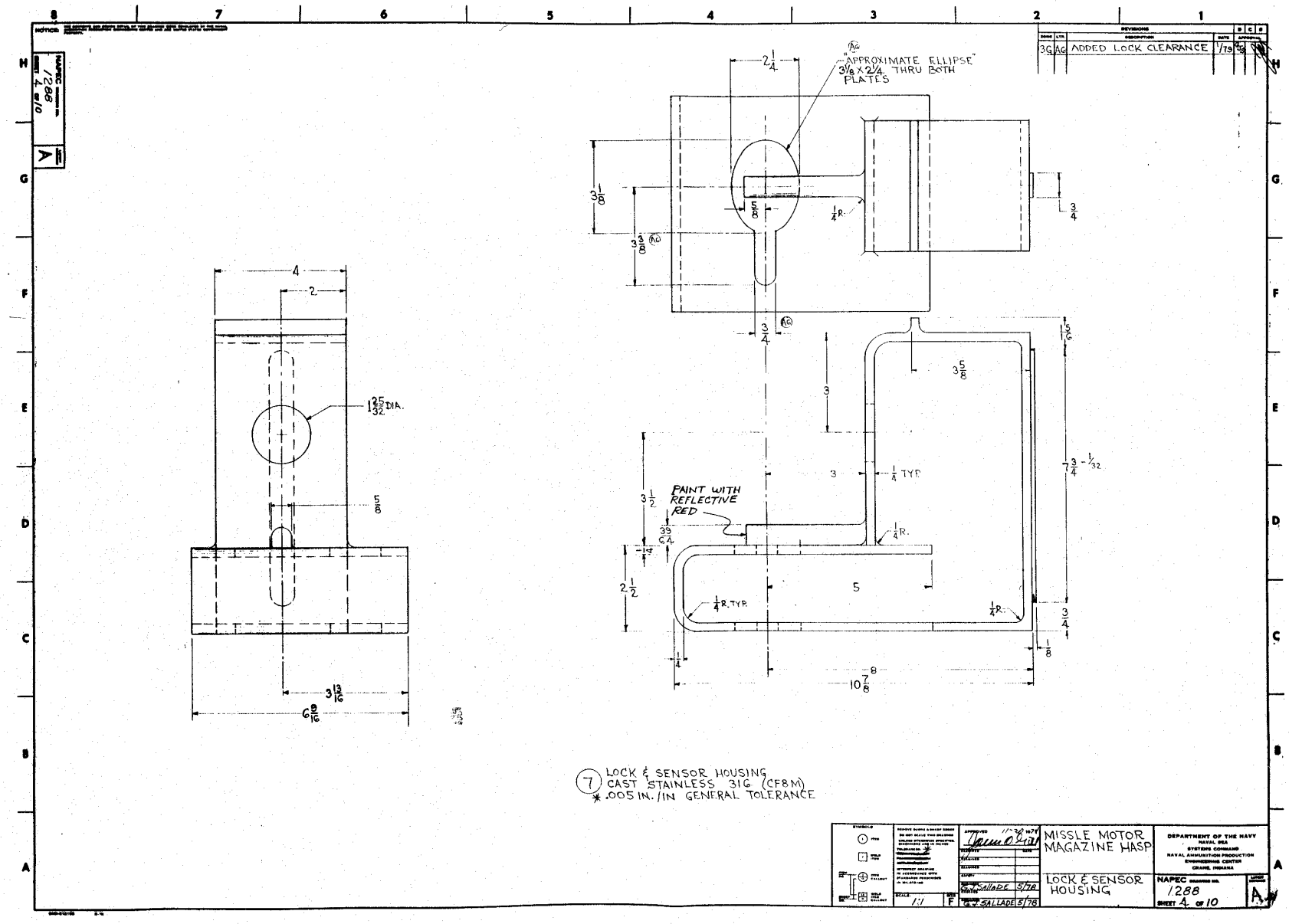

NAPEC 1288 SHEET 4 OF 10
A
REVISIONS
3G AG ADDED LOCK CLEARANCE 1/79
"APPROXIMATE ELLIPSE" 3 1/8 X 2 1/4 THRU BOTH PLATES
PAINT WITH REFLECTIVE RED
1 25/32 DIA.
3 13/16
6 9/16
10 7/8
7 3/4 - 1/32
1/4 R. TYP.
1/4 TYP.
7 LOCK & SENSOR HOUSING
CAST STAINLESS 316 (CF8M)
* .005 IN./IN GENERAL TOLERANCE
MISSLE MOTOR MAGAZINE HASP
LOCK & SENSOR HOUSING
DEPARTMENT OF THE NAVY
NAVAL SEA SYSTEMS COMMAND
NAVAL AMMUNITION PRODUCTION ENGINEERING CENTER
CRANE, INDIANA
NAPEC 1288
SHEET 4 OF 10
A

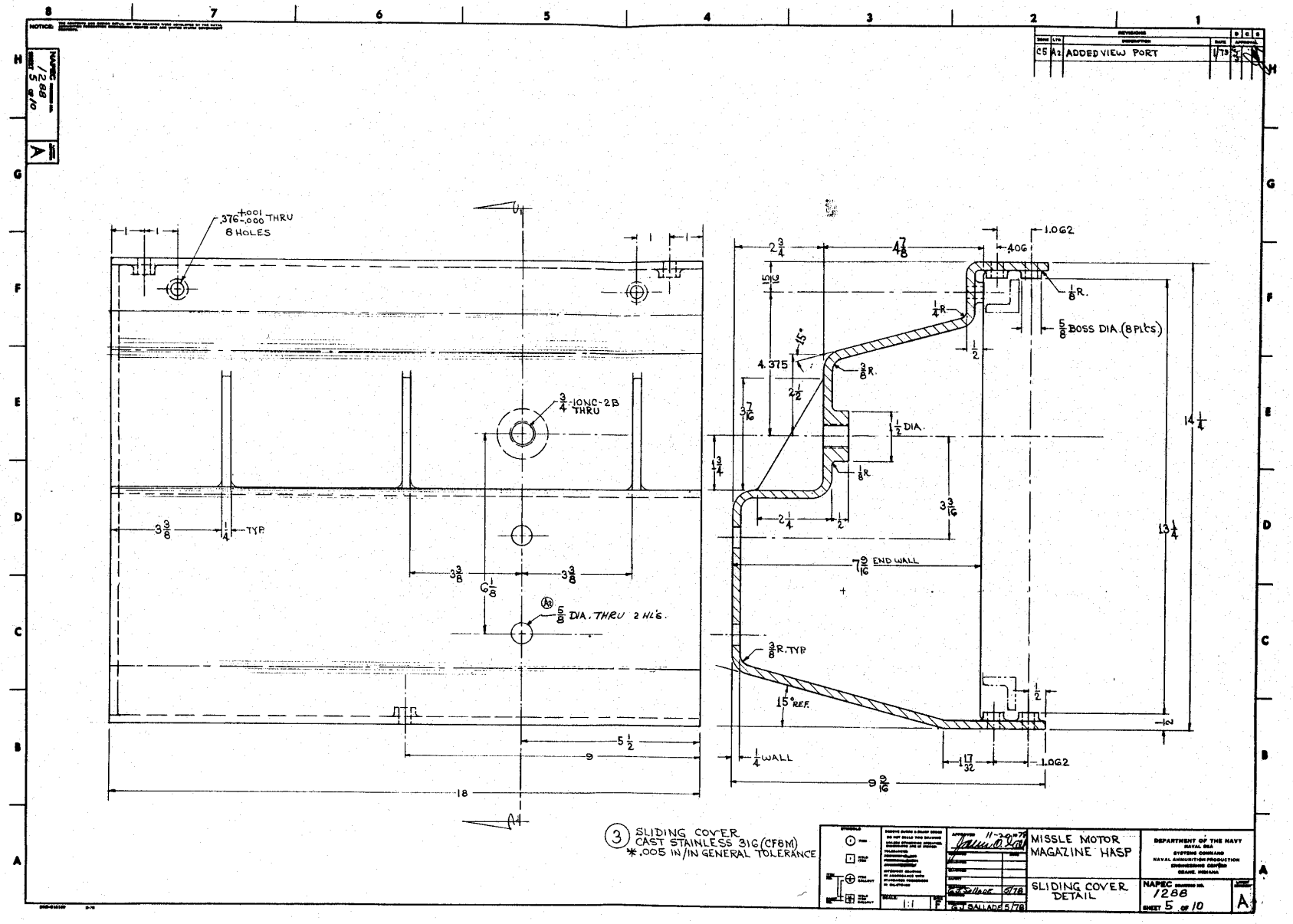

NOTICE:
NAPEC 1288 SHEET 5 of 10
A
C5 A2 ADDED VIEW PORT 1/79
.376 +.001 -.000 THRU 8 HOLES
3/4-10NC-2B THRU
5/8 DIA. THRU 2 HL'S.
3 3/8
1/4 TYP.
6 1/8
5 1/2
9
18
2 3/4
4 7/8
.406
1.062
1/8 R.
5/8 BOSS DIA. (8 PL'CS)
1/4 R.
15°
4.375
3/8 R.
2 1/2
3 7/16
1 1/2 DIA.
1 3/4
1/8 R.
2 1/4
1/2
3 3/16
7 9/16 END WALL
3/8 R. TYP.
15° REF.
1/4 WALL
1 17/32
9 9/16
14 1/4
13 1/4
3 SLIDING COVER
CAST STAINLESS 316 (CF8M)
*.005 IN/IN GENERAL TOLERANCE
MISSLE MOTOR MAGAZINE HASP
SLIDING COVER DETAIL
DEPARTMENT OF THE NAVY
NAVAL SEA SYSTEMS COMMAND
NAVAL AMMUNITION PRODUCTION ENGINEERING CENTER
CRANE, INDIANA
NAPEC 1288
SHEET 5 OF 10
A
1:1
F
G.J. SALLADE 5/78

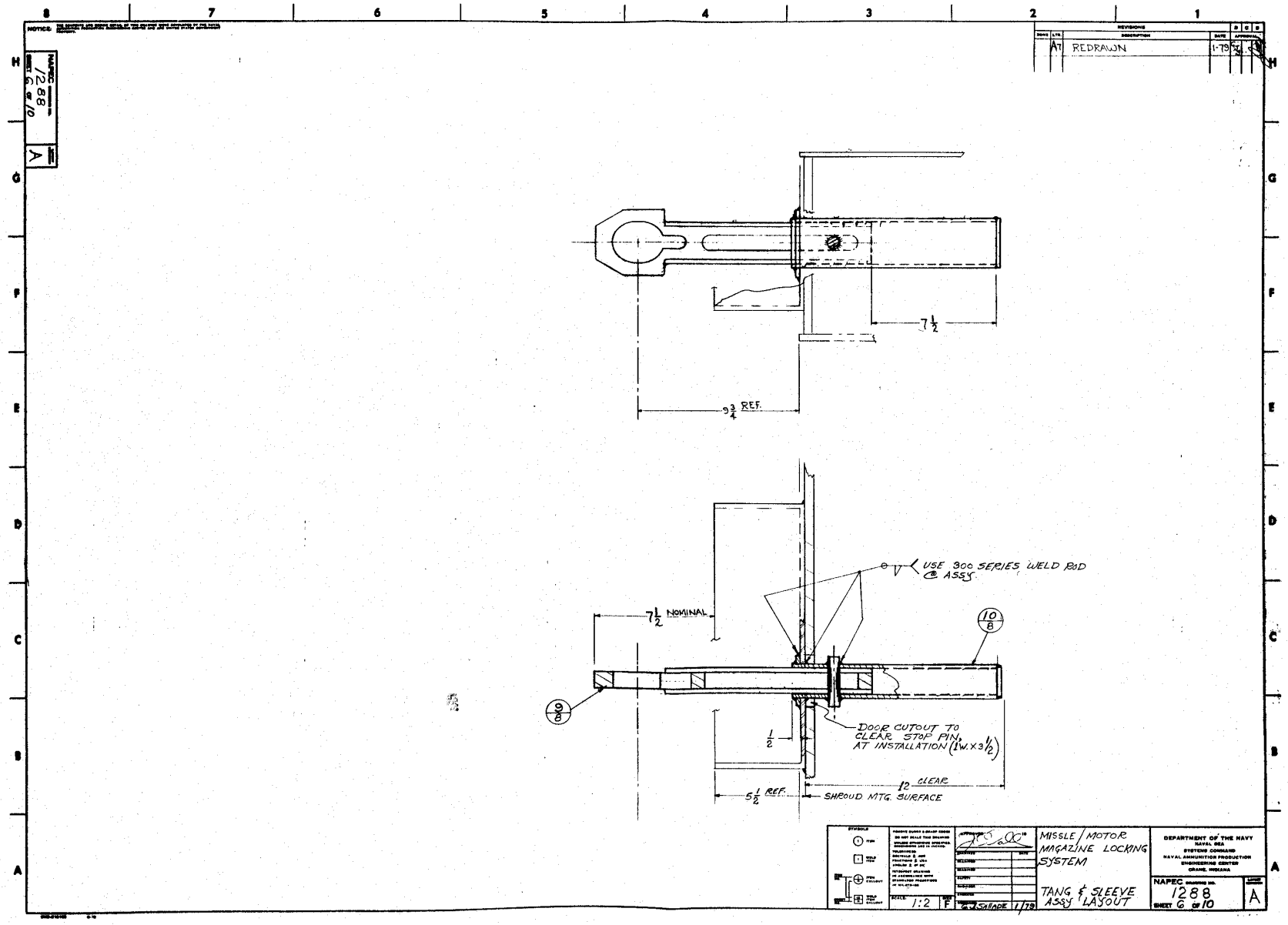

NOTICE:
NAPEC 1288 SHEET 6 of 10
A
REVISIONS
A7 REDRAWN 1-79
7 1/2
9 3/4 REF.
USE 300 SERIES WELD ROD @ ASSY.
7 1/2 NOMINAL
10/8
9/8
1/2
DOOR CUTOUT TO CLEAR STOP PIN, AT INSTALLATION (1W. X 3 1/2)
12 CLEAR
5 1/2 REF.
SHROUD MTG. SURFACE
SYMBOLS
SCALE 1:2
F
G.J. SALADE 1/79
MISSLE / MOTOR MAGAZINE LOCKING SYSTEM
TANG & SLEEVE ASSY LAYOUT
DEPARTMENT OF THE NAVY
NAVAL SEA SYSTEMS COMMAND
NAVAL AMMUNITION PRODUCTION ENGINEERING CENTER
CRANE, INDIANA
NAPEC 1288
SHEET 6 of 10
A

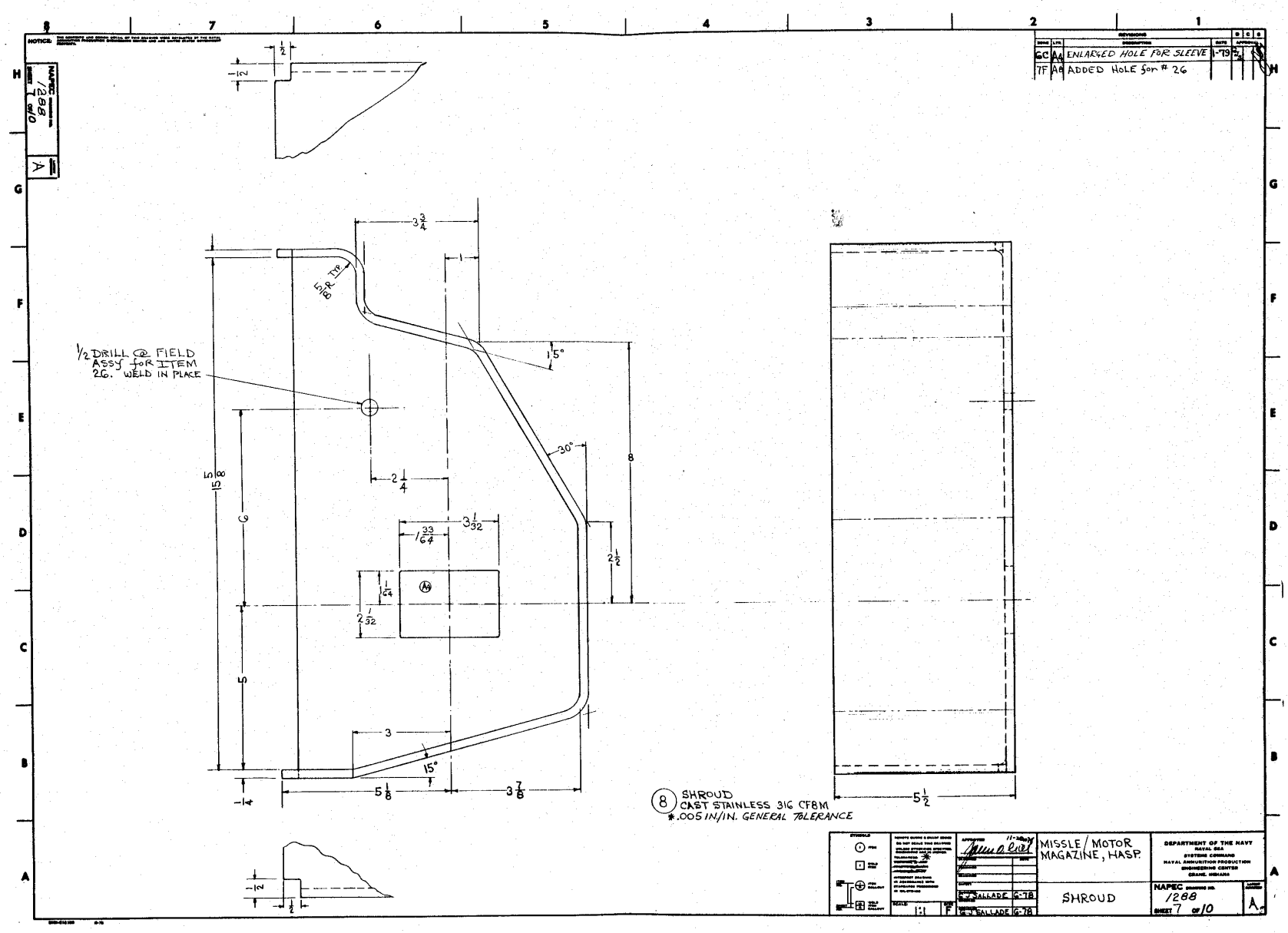

(8) SHROUD
CAST STAINLESS 316 CF8M
*.005 IN/IN. GENERAL TOLERANCE

REVISIONS					
SYMB	LTR	DESCRIPTION	DATE	APPROVED	
GC	A4	ENLARGED HOLE FOR SLEEVE	1-79		
7F	A8	ADDED HOLE for # 26			

NAPEC DRAWING NO. 1288 SHEET 7 of 10 A

NOTICE: THE INFORMATION AND DESIGN DETAILS OF THIS DRAWING WERE DETERMINED BY THE NAVAL AMMUNITION PRODUCTION ENGINEERING CENTER AND ARE LIMITED TO NAVAL AMMUNITION PRODUCTION.

SYMBOLS: FIRST ANGLE PROJECTION; THIRD ANGLE PROJECTION

UNLESS OTHERWISE SPECIFIED DIMENSIONS ARE IN INCHES. TOLERANCES: FRACTIONS ±1/64, DECIMALS ±.005, ANGLES ±1/2°. FINISH: 125 RMS. DO NOT SCALE THIS DRAWING. DRAWN TO FULL SCALE. DIMENSIONS IN BRACKETS ARE REFERENCE. DIMENSIONS IN ANGLE BRACKETS ARE MINIMUM. TOLERANCE ±. DIMENSIONS IN PARENTHESIS ARE MAXIMUM. TOLERANCE ±. ALL DIMENSIONS AFTER PROCESSING. ALL DIMENSIONS AFTER WELDING. ALL DIMENSIONS AFTER PAINTING. ALL DIMENSIONS AFTER PLATING. ALL DIMENSIONS AFTER PROCESSING. ALL DIMENSIONS AFTER WELDING. ALL DIMENSIONS AFTER PAINTING. ALL DIMENSIONS AFTER PLATING.

APPROVED 11-30-77
DRAWN G. J. SALLADE 6-78
CHECKED G. J. SALLADE 6-78
SCALE 1:1 SIZE F

MISSLE / MOTOR MAGAZINE, HASP

SHROUD

DEPARTMENT OF THE NAVY
NAVAL SEA SYSTEMS COMMAND
NAVAL AMMUNITION PRODUCTION ENGINEERING CENTER
CRANE, INDIANA

NAPEC DRAWING NO. 1288
SHEET 7 OF 10
A

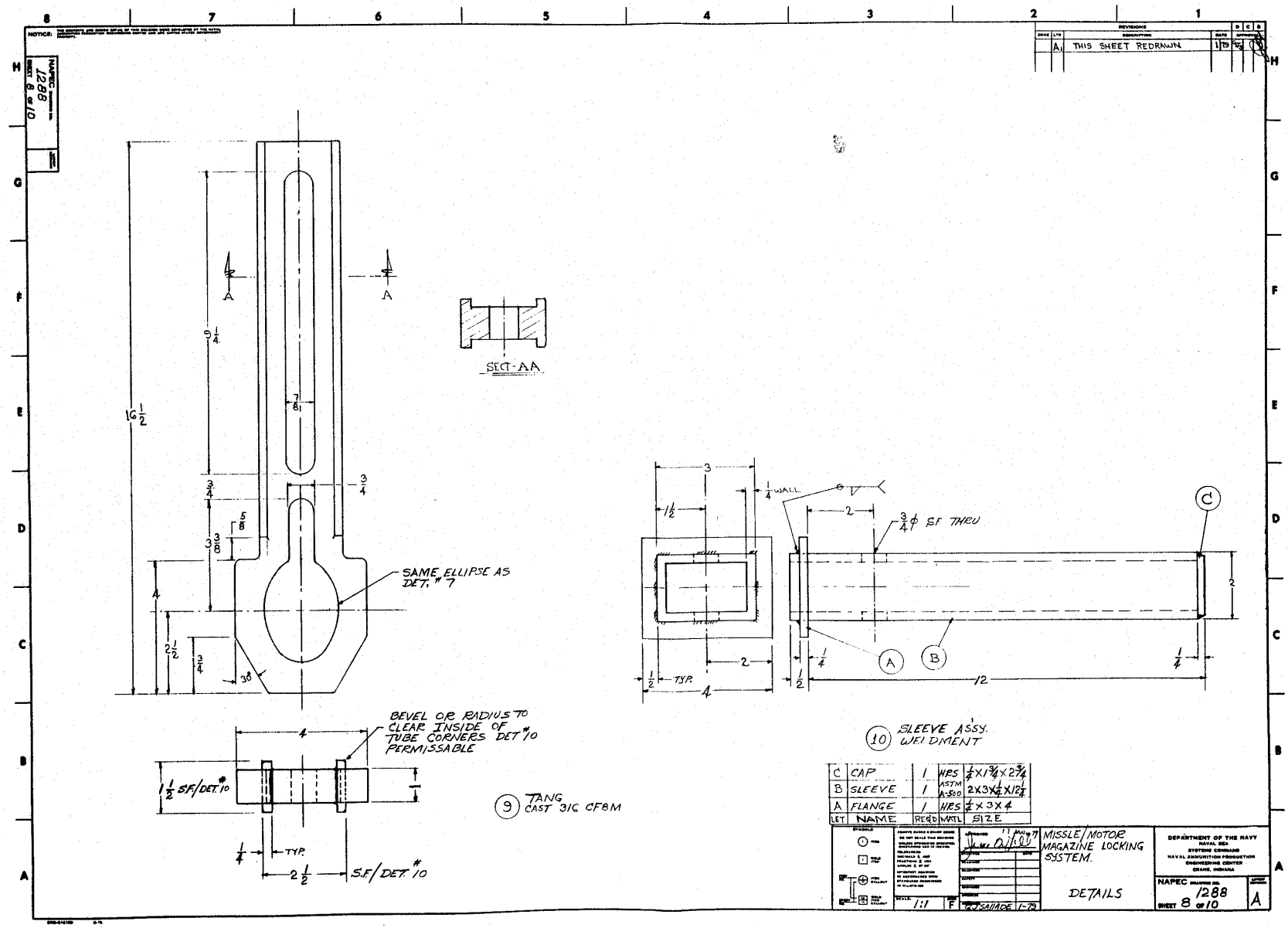

NOTICE:
NAPEC DRAWING NO. 1288
SHEET 8 OF 10
REVISIONS
ZONE LTR DESCRIPTION DATE APPROVED
A1 THIS SHEET REDRAWN 1/79
SECT-AA
SAME ELLIPSE AS DET. #7
BEVEL OR RADIUS TO CLEAR INSIDE OF TUBE CORNERS DET #10 PERMISSABLE
1 1/2 S.F./DET. #10
TYP.
S.F./DET. #10
9 TANG CAST 316 CF8M
1/4 WALL
3/4 ϕ S.F. THRU
10 SLEEVE ASSY. WELDMENT
C CAP 1 HRS 1/4 X 1 3/4 X 2 3/4
B SLEEVE 1 ASTM A-500 2 X 3 X 1/4 X 12 1/4
A FLANGE 1 HRS 1/4 X 3 X 4
LET NAME REQ'D MATL SIZE
MISSLE/MOTOR MAGAZINE LOCKING SYSTEM.
DETAILS
DEPARTMENT OF THE NAVY
NAVAL SEA SYSTEMS COMMAND
NAVAL AMMUNITION PRODUCTION ENGINEERING CENTER
CRANE, INDIANA
NAPEC DRAWING NO. 1288
SHEET 8 OF 10
A
SCALE 1:1
F
G.J. SALLADE 1-79

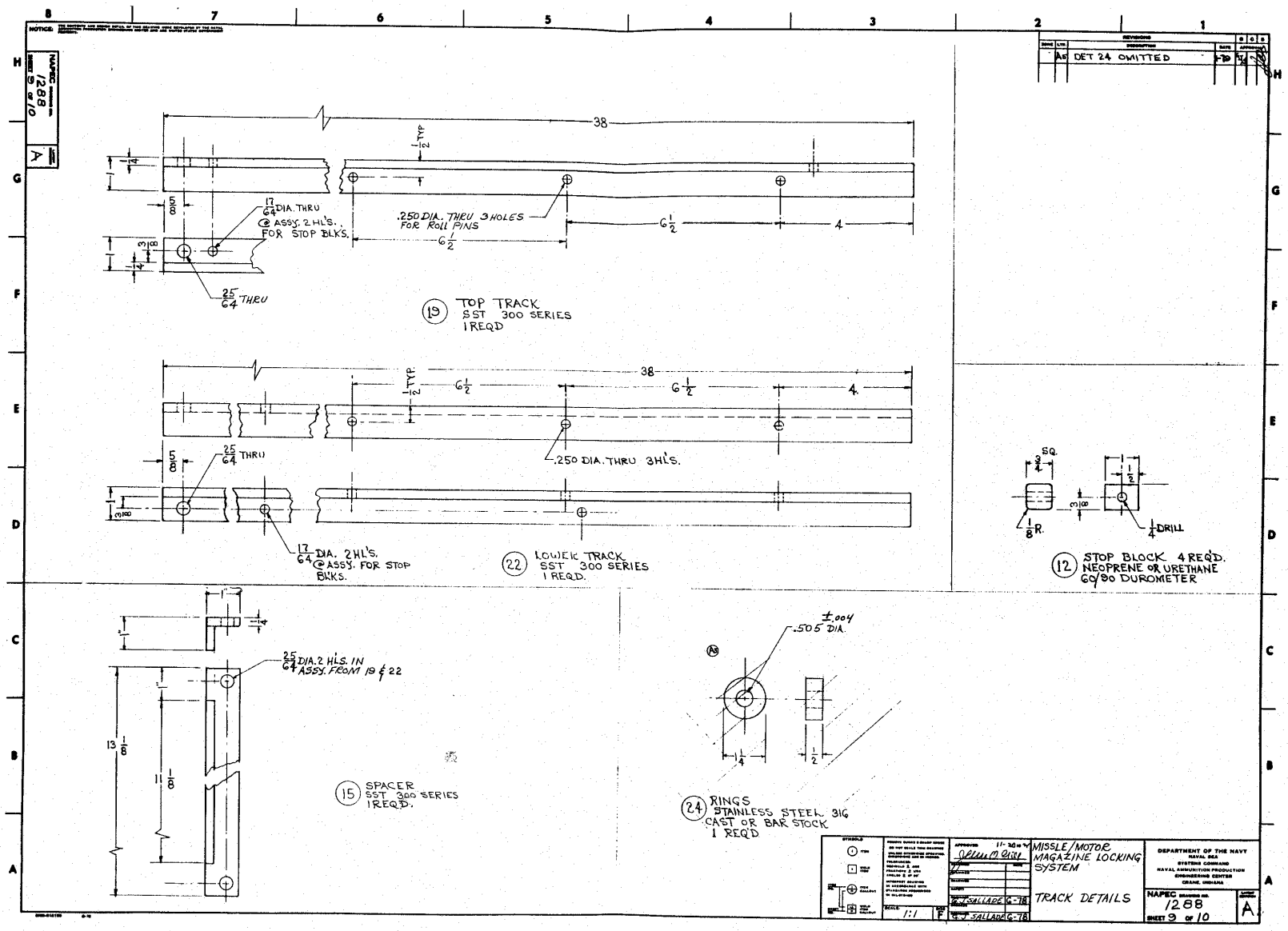

NOTICE
NAPEC DRAWING NO. 1288
SHEET 9 OF 10
A
REVISIONS
A5 DET 24 OMITTED
38
1/2 TYP
1/4
5/8
17/64 DIA. THRU @ ASSY. 2 HL'S. FOR STOP BLKS.
.250 DIA. THRU 3 HOLES FOR ROLL PINS
6 1/2
4
3/8
25/64 THRU
19 TOP TRACK SST 300 SERIES 1 REQD
.250 DIA. THRU 3 HL'S.
17/64 DIA. 2 HL'S. @ ASSY. FOR STOP BLKS.
22 LOWER TRACK SST 300 SERIES 1 REQD.
3/4 SQ.
1/8 R.
1/4 DRILL
12 STOP BLOCK 4 REQ'D. NEOPRENE OR URETHANE 60/90 DUROMETER
25/64 DIA. 2 HL'S. IN ASSY. FROM 19 & 22
13 1/8
11 1/8
15 SPACER SST 300 SERIES 1 REQ'D.
±.004 .505 DIA.
1/4
1/2
24 RINGS STAINLESS STEEL 316 CAST OR BAR STOCK 1 REQ'D
SCALE 1:1
F
G. J. SALLADE 6-78
APPROVED 11-30-79
MISSLE/MOTOR MAGAZINE LOCKING SYSTEM
TRACK DETAILS
DEPARTMENT OF THE NAVY NAVAL SEA SYSTEMS COMMAND NAVAL AMMUNITION PRODUCTION ENGINEERING CENTER CRANE, INDIANA
NAPEC DRAWING NO. 1288
SHEET 9 OF 10
A

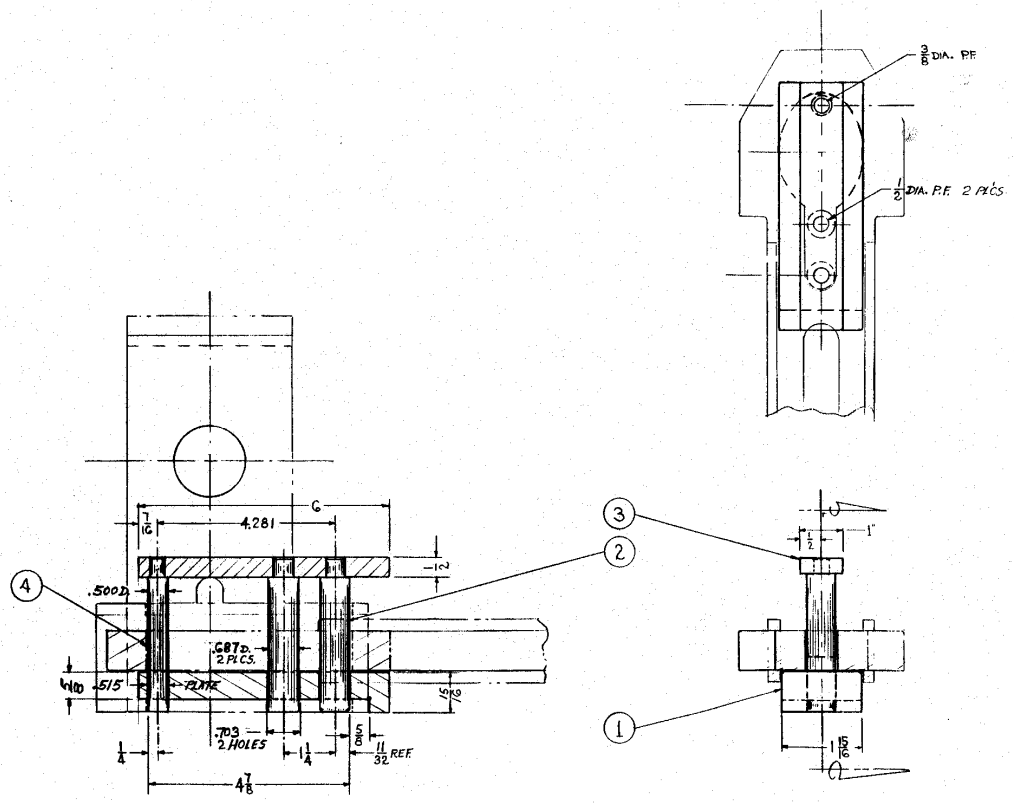

NOTE

ITEM	NOMENCLATURE	REQ'D	MATL	REMARKS
4	PIN	1	D.R.	1/2 ϕ X 4 LG.
3	PIN PL 1/2X1X6 1/4	1	CRS.	CAD. PL OR BLK. OXIDE
2	PIN	2	D.R.	11/16 ϕ X 4" LG.
1	SPACER 1X2X6 1/4	1	CRS	CAD. PL. OR BLK. OXIDE

MISSLE MOTOR MAGAZINE HASP ALIGNMENT FIXTURE (SHROUD ASSY. TO DOOR)

DEPARTMENT OF THE NAVY
NAVAL SEA
SYSTEMS COMMAND
NAVAL AMMUNITION PRODUCTION ENGINEERING CENTER
CRANE, INDIANA

NAPEC DRAWING NO. 1288
SHEET 10 OF 10
C

SCALE 1:1
SIZE F

G. J. SALADE 7/79
G. J. SALADE 7/79

NOTICE: THE CONTENTS AND DESIGN DETAIL OF THIS DRAWING WERE DEVELOPED BY THE NAVAL AMMUNITION PRODUCTION ENGINEERING CENTER AND NAVAL SHORE ENGINEERING DEPARTMENTS.

REVISIONS					
ZONE	LTR	DESCRIPTION	DATE	APPROVAL	
	A	[illegible]	2-79	[illegible]	
	B	SEE NOR 1294B	12-84	[illegible]	

NAPEC DRAWING 1294 SHEET 1 OF 3

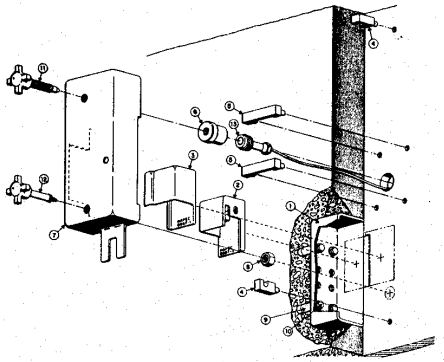

LIST OF MATERIALS				
GEM	ITEM	QTY	DESCRIPTION	NAVAL/COMM'L DESIG
	1	1	WALL MOUNTING BOX	NAPEC DWG 1286
	2	1	CLASP	5532334 SHT2
	3	1	COVER	5532334 SHT2
	4	2	AIB STAPLE	5532336 SHT2
	5	2	AIB LUG	5532336 SHT2
	6	1	SENSOR BODY	5532336 SHT5
	7	1	AIB HOUSING	5532336 SHT2
	8	1	HOLD DOWN NUT	5532336 SHT3
	9	4	1/2" CONCRETE ANCHOR	
	10	4	1/2" HEX HD CAP SCREW	
	11	1	BAR JACK SCREW, INACTIVE LEAF	5532336 SHT3
	12	1	BAR JACK SCREW, ACTIVE LEAF	5532336 SHT4
	13	1	SENSOR	5532336 SHT5

(B)

NOTES:
1. HIGH SECURITY HASP INSTALLATION HEIGHT IS INTENDED TO BE OPERATOR CONVENIENT. FOR STRUCTURES WITH A DOCK OR APRON GREATER THAN TWO (2) INCHES BELLOW THE BOTTOM OF THE DOOR, THE HEIGHT DIMENSION SPECIFIED SHOULD BE MEASURED FROM THE SURFACE OF THE DOCK OR APRON IN LIEU OF THE BOTTOM OF THE DOOR.
2. USE WELDING ROD 310-16, 3/32 DIA.

(B)

STEP 1

IMPLANT WALL MOUNTING BOX IN JAMB AND SECURE WITH 1/2" CONCRETE ANCHORS.

NOTCH DOOR FOR CLEARANCE.

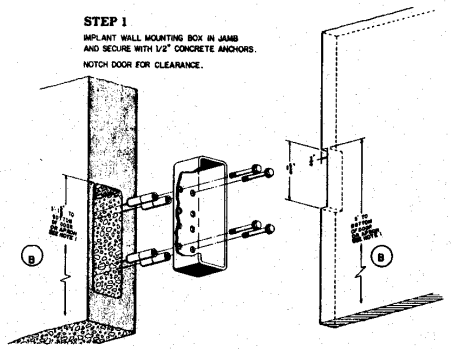

(B)

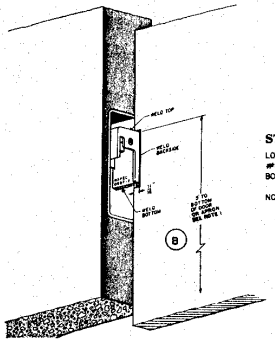

STEP 2

LOCATE AND WELD CLASP #0957-2 TO WALL MOUNTING BOX.

NOTE: FOR INSIDE SWINGING DOORS REPLACE 0957-2 WITH 0958-1.

(B)

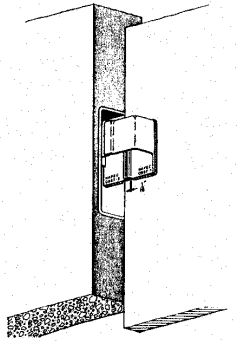

STEP 3

LOCATE HASP COVER 0957-1 ON DOOR FACE AND WELD.

NOTE: FOR INSIDE SWINGING DOORS REPLACE 0957-1 WITH 0958-2.

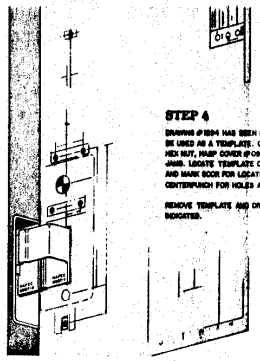

STEP 4

DRAWING #1294 HAS BEEN MADE TO BE USED AS A TEMPLATE. CUT AROUND HEX NUT, HASP COVER @ 0957-1 AND ALONG JAMB. LOCATE TEMPLATE OVER HASP COVER AND MARK DOOR FOR LOCATING HEX NUT. CENTERPUNCH FOR HOLES AS MARKED.

REMOVE TEMPLATE AND DRILL HOLES AS INDICATED.

B	B	A
1	2	3
REVISION	STATUS	OF SHEETS

(B)

APPROVED		3-5-79	
DRAWN			DATE
DESIGNED			
TECHNICAL		3-79	
SUPERV.			
DRAWING	KROH	3-79	
DESIGN			
PROGRAM			

SCALE: SIZE F

HIGH SECURITY HASP AND AIB INSTALLATION FOR SINGLE DOORS A SLIDING RIGHT TO OPEN

INSTALLATION PROCEDURES

DEPARTMENT OF THE NAVY
NAVAL SEA SYSTEMS COMMAND
NAVAL AMMUNITION PRODUCTION ENGINEERING CENTER
CRANE, INDIANA

NAPEC DRAWING NO. 1294

SHEET 1 OF 3

NUMBER 0957-2

NOTICE: THE DESIGNS AND DATA DETAIL OF THIS DRAWING WERE PREPARED BY THE NAVAL AMMUNITION PRODUCTION ENGINEERING CENTER AND ARE SUPPLIED FOR INFORMATION PURPOSES.

REVISIONS					
ZONE	LTR	DESCRIPTION	DATE	APPROVAL	
	A	Change To Title	9-79		
	B	SEE NOR 12948	1/81		

NAPEC 1294 SHEET 2 OF 3

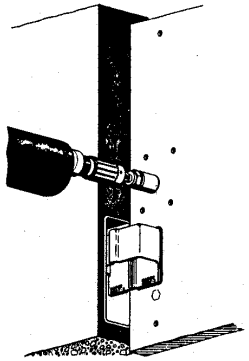

STEP 5

CENTERPUNCH AND DRILL .250 DIA. THRU. ENLARGE HOLE TO 1-3/4" (44 MM) WITH A HOLE SAW EQUIPPED WITH A .250 PILOT.

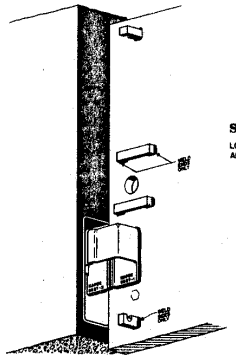

STEP 6

LOCATE LUGS AND STAPLES AND WELD IN PLACE.

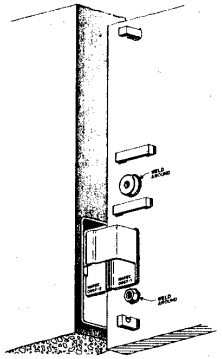

STEP 7

INSERT SENSOR BODY AND WELD IN PLACE.

LOCATE HOLD DOWN NUT AND WELD TO DOOR.

STEP 8

AIB MODIFICATION TO COVER HASP.

NOTE: CUT JAMB SIDE OF AIB ONLY.

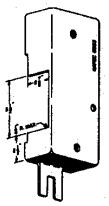

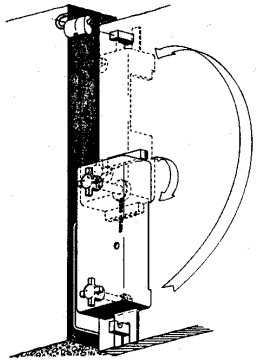

STEP 9

AIB INSTALLED IN SECURE POSITION MINUS LOCK. SENSOR SCREW KNOBS ARE SCREWED DOWN SNUG. TO PLACE AIB IN STORE POSITION, ROTATE AIB COVER 180° AND SECURE TO TOP STAPLE WITH LOCK.

SYMBOLS: PEEN; WELD (TYP); PEEN (EXCLUDE); WELD (TYP) (EXCLUDE)

REMOVE BURRS & SHARP EDGES ON ALL PARTS

DO NOT SCALE THIS DRAWING

UNLESS OTHERWISE SPECIFIED DIMENSIONS ARE TO FINISH

SIZE F

APPROVED: 3-5-79

		DATE
DESIGNED		
REVIEWED		
DRAWN	TMC	3/79
ENGINEER	R.O.H.	3-79
CHECKED		
MANUFACTURE		

HIGH SECURITY HASP AND AIB INSTALLATION FOR SINGLE DOORS SLIDING RIGHT TO OPEN

INSTALLATION PROCEDURES

DEPARTMENT OF THE NAVY
NAVAL SEA SYSTEMS COMMAND
NAVAL AMMUNITION PRODUCTION ENGINEERING CENTER
CRANE, INDIANA

NAPEC DRAWING NO. 1294

SHEET 2 OF 3

AUTHORIZATION

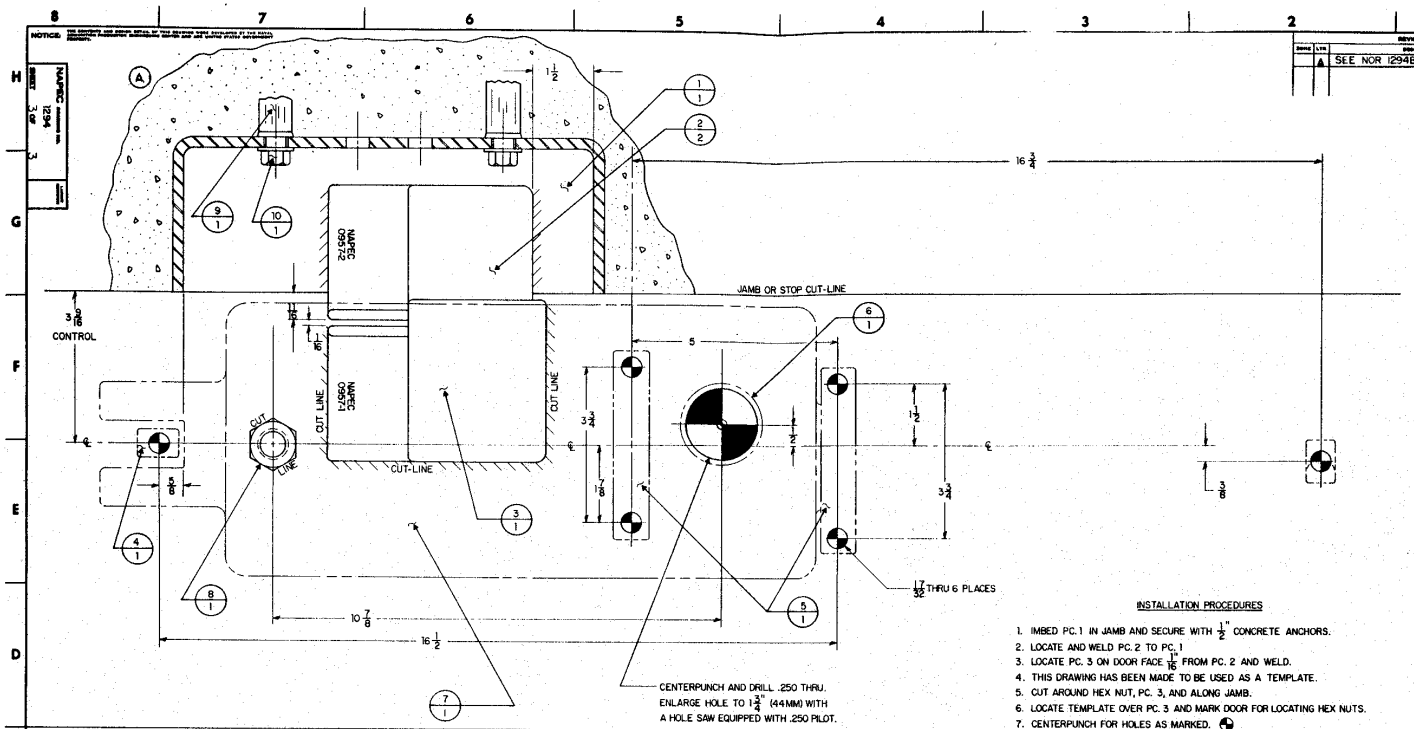

INSTALLATION PROCEDURES

1. IMBED PC. 1 IN JAMB AND SECURE WITH 1/2" CONCRETE ANCHORS.
2. LOCATE AND WELD PC. 2 TO PC. 1
3. LOCATE PC. 3 ON DOOR FACE 1/16" FROM PC. 2 AND WELD.
4. THIS DRAWING HAS BEEN MADE TO BE USED AS A TEMPLATE.
5. CUT AROUND HEX NUT, PC. 3, AND ALONG JAMB.
6. LOCATE TEMPLATE OVER PC. 3 AND MARK DOOR FOR LOCATING HEX NUTS.
7. CENTERPUNCH FOR HOLES AS MARKED.
8. REMOVE TEMPLATE AND DRILL ALL HOLES AS INDICATED.
9. LOCATE PCS. 4 & 5 AND WELD IN PLACE.
10. INSERT PC. 6 AND WELD IN PLACE.
11. WELD PC. 8 TO DOOR.

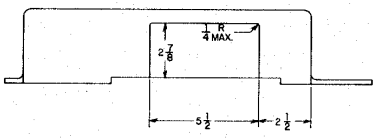

A1B MODIFICATION TO COVER HASP

NOTE: CUT JAMB SIDE OF A1B ONLY

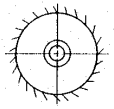

SENSOR BODY

STAPLE

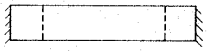

LUG

TYPICAL WELDING PLAN

NOTES:

1. THIS DRAWING IS USABLE FOR RIGHT-HAND HINGED DOORS SWINGING OUT.
2. PCS. 2 & 3 CAN BE REPLACED WITH PCS. NAPEC DWG. 0958 ITEMS 1 & 2 RESPECTIVELY FOR RIGHT-HAND HINGED DOORS SWINGING IN.
3. PCS. 4, 5, 6 & 7 SHOWN IN PHANTOM FOR CLARITY.

ITEM	NOMENCLATURE		MAT'L.	NO. REQ'D	REMARKS
10	1/2" HEX HD. CAP SCREW		STD.	2	
9	1/2" CONCRETE ANCHOR		STD.	2	
8	3/4-10 HEX NUT		SS	1	
7	A1B HOUSING	5532336	304 SS	1	SEE DETAIL
6	SENSOR BODY		304 SS	1	SEE NOTE 3
5	A1B LUG (STD)	5532336	304 SS	2	SEE NOTE 3
4	A1B STAPLE (STD)	5532336	304 SS	2	SEE NOTE 3
3	MK 2 MOD 8 RH HASP PC #0957-1		CA6NM	1	SEE NOTE 2
2	MK 2 MOD 8 RH HASP PC #0957-2		CA6NM	1	SEE NOTE 2
1	WALL MOUNTING BOX NAPEC DWG. 1286		316SS	1	

REVISIONS			
SYMB	LTR	DESCRIPTION	DATE
	A	SEE NOR 12948	11/1/

HIGH SECURITY HASP AND A1B INSTALLATION FOR SINGLE DOORS SLIDING RIGHT TO OPEN

INSTALLATION DETAILS

DEPARTMENT OF THE NAVY
NAVAL SEA SYSTEMS COMMAND
NAVAL AMMUNITION PRODUCTION ENGINEERING CENTER
CRANE, INDIANA

NAPEC DRAWING NO. 1294

SHEET 3 OF 3

SCALE FULL

SIZE F

APPROVED 2-5-79

DRAWN RBOH 3-79

NAPEC DWG. 1294 SHEET 3 OF 3

REVISIONS						
ZONE	LTR.	DESCRIPTION	DATE	APPROVAL		
A 1	A	CHANGE TO TITLE	9-77			
E 5	B	ADDED NOTES 1&2	10-82	JF		
	C	SEE NOR 1295C	3/6/85			

NOTICE: THE CONTENTS AND DESIGN SHOWN ON THIS DRAWING ARE COPYRIGHTED BY THE NAVAL AMMUNITION PRODUCTION ENGINEERING CENTER AND ARE UNDER STRICT INTERNATIONAL PROPERTY.

NAPEC DRAWING NO. 1295 SHEET 1 OF 3

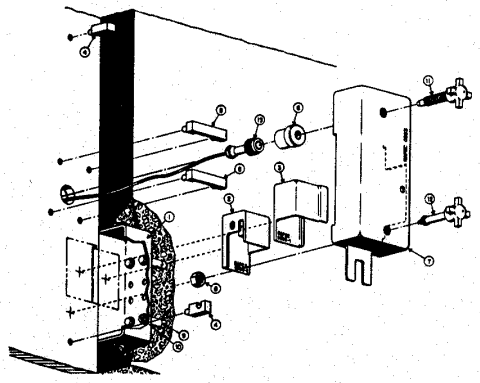

LIST OF MATERIALS

GEM	ITEM	QTY	DESCRIPTION	NAVAL/COMM'L DESIG
	1	1	WALL MOUNTING BOX	NAPEC DWG 1286
	2	1	CLASP	5532335 SHT2
	3	1	COVER	5532335 SHT2
	4	2	AIB STAPLE	5532336 SHT2
	5	2	AIB LUG	5532336 SHT2
	6	1	SENSOR BODY	5532336 SHT5
	7	1	AIB HOUSING	5532336 SHT2
	8	1	HOLD DOWN NUT	5532336 SHT3
	9	4	1/2" CONCRETE ANCHOR	
	10	4	1/2" HEX HD CAP SCREW	
	11	1	BAR JACK SCREW, INACTIVE LEAF	5532336 SHT3
	12	1	BAR JACK SCREW, ACTIVE LEAF	5532336 SHT4
	13	1	SENSOR	5532336 SHT5

NOTES:
1. HIGH SECURITY HASP INSTALLATION HEIGHT IS INTENDED TO BE OPERATOR CONVENIENT. FOR STRUCTURES WITH A DOCK OR APRON GREATER THAN TWO (2) INCHES BELOW THE BOTTOM OF THE DOOR, THE HEIGHT DIMENSION SPECIFIED SHOULD BE MEASURED FROM THE SURFACE OF THE DOCK OR APRON IN LIEU OF THE BOTTOM OF THE DOOR.
2. USE WELDING ROD 310-16, 3/32 DIA.

STEP 1

IMPLANT WALL MOUNTING BOX IN JAMB AND SECURE WITH 1/2" CONCRETE ANCHORS.

NOTCH DOORS FOR CLEARANCE.

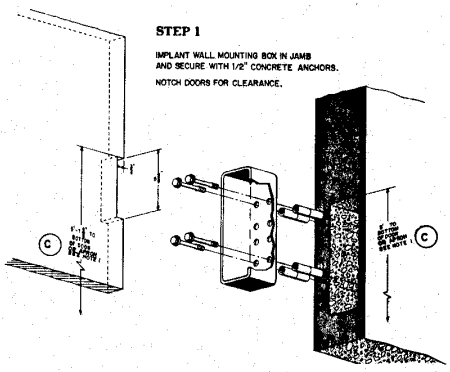

STEP 2

LOCATE AND WELD CLASP #0958-2 TO WALL MOUNTING BOX.

NOTE. FOR INSIDE SWINGING DOORS REPLACE #0958-2 WITH #0957-1.

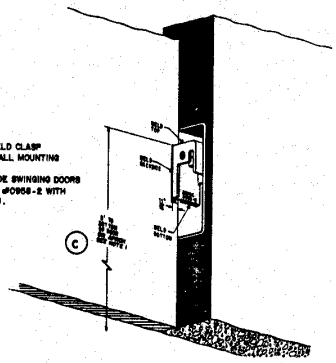

STEP 3

LOCATE HASP COVER #0958-1 ON DOOR FACE AND WELD.

NOTE: FOR INSIDE SWINGING DOORS REPLACE #0958-1 WITH #0957-2.

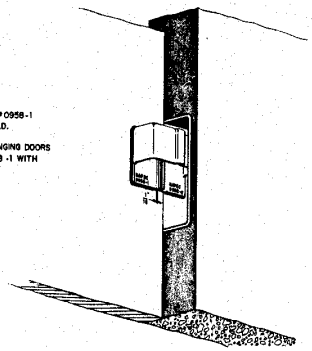

STEP 4

DRAWING #1295 HAS BEEN MADE TO BE USED AS A TEMPLATE. CUT AROUND HEX NUT, HASP COVER #0958-1 AND ALONG JAMB. LOCATE TEMPLATE OVER HASP COVER AND MARK DOOR FOR LOCATING HEX NUT. CENTERPUNCH FOR HOLES AS MARKED.

REMOVE TEMPLATE AND DRILL HOLES AS INDICATED.

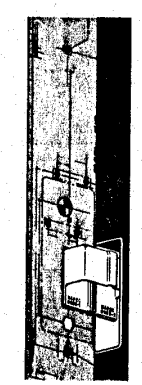

C	C	A
1	2	3
REVISION STATUS OF SHEETS		

SYMBOLS: ITEM; WELD ITEM; WELD FACE; WELD FACE CALLOUT; WELD FACE CALLOUT

REMOVE BURRS & SHARP EDGES. DO NOT SCALE THIS DRAWING. UNLESS OTHERWISE SPECIFIED DIMENSIONS ARE IN INCHES.

APPROVED 3-5-79

DRAWN 3/79

DESIGNED RBOH 3-79

SCALE: SIZE F

HIGH SECURITY HASP AND AIB INSTALLATION FOR SINGLE DOORS (A) SLIDING LEFT TO OPEN

INSTALLATION PROCEDURES

DEPARTMENT OF THE NAVY
NAVAL SEA
SYSTEMS COMMAND
NAVAL AMMUNITION PRODUCTION ENGINEERING CENTER
CRANE, INDIANA

NAPEC DRAWING NO. 1295

SHEET 1 OF 3

NOTICE: THE INFORMATION HEREIN IS PROPRIETARY TO THE NAVAL AMMUNITION PRODUCTION ENGINEERING CENTER.

NAPEC DRAWING 1295 SHEET 2 OF 3

REVISIONS				
ZONE	LTR	DESCRIPTION	DATE	APPROVAL
A 1	A	CHANGE TO TITLE	9-77	
	B	——		
	C	SEE NOR 1295C		

STEP 5

CENTERPUNCH AND DRILL .250 DIA. THRU. ENLARGE HOLE TO 1-3/4" (44MM) WITH A HOLE SAW EQUIPPED WITH A .250 PILOT.

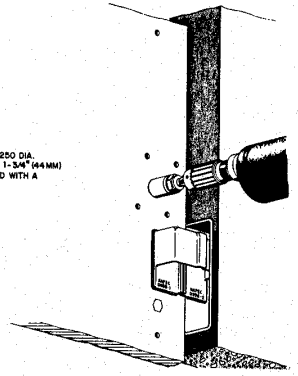

STEP 6

LOCATE LUGS AND STAPLES AND WELD IN PLACE.

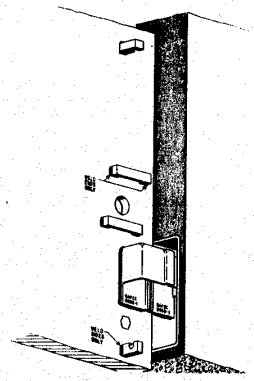

STEP 7

INSERT SENSOR BODY AND WELD IN PLACE.

LOCATE HOLD DOWN NUT AND WELD TO DOOR.

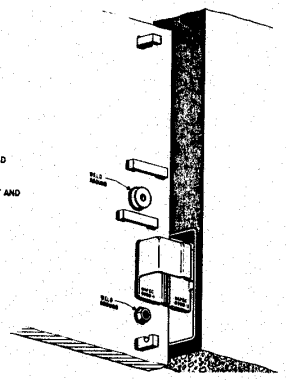

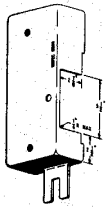

STEP 8

AIB MODIFICATION TO COVER HASP.

NOTE: CUT JAMB SIDE OF AIB ONLY.

STEP 9

AIB INSTALLED IN SECURE POSITION MINUS LOCK. SENSOR SCREW KNOBS ARE SCREWED DOWN SNUG. TO PLACE AIB IN STORE POSITION, ROTATE AIB COVER 180° AND SECURE TO TOP STAPLE WITH LOCK.

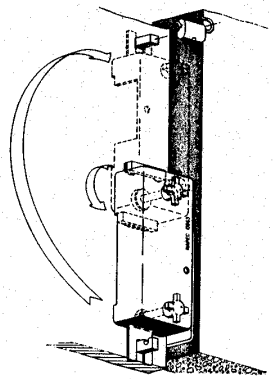

SYMBOLS		APPROVED	3-5-80
		DRAWN	DATE
		ENGINEER	
		ENGINEER	3/79
		DESIGNER	SAOH 3-79

HIGH SECURITY HASP AND AIB INSTALLATION FOR SINGLE DOORS (A) SLIDING LEFT TO OPEN

INSTALLATION PROCEDURES

DEPARTMENT OF THE NAVY
NAVAL SEA SYSTEMS COMMAND
NAVAL AMMUNITION PRODUCTION ENGINEERING CENTER
CRANE, INDIANA

NAPEC DRAWING NO. 1295

SHEET 2 OF 3

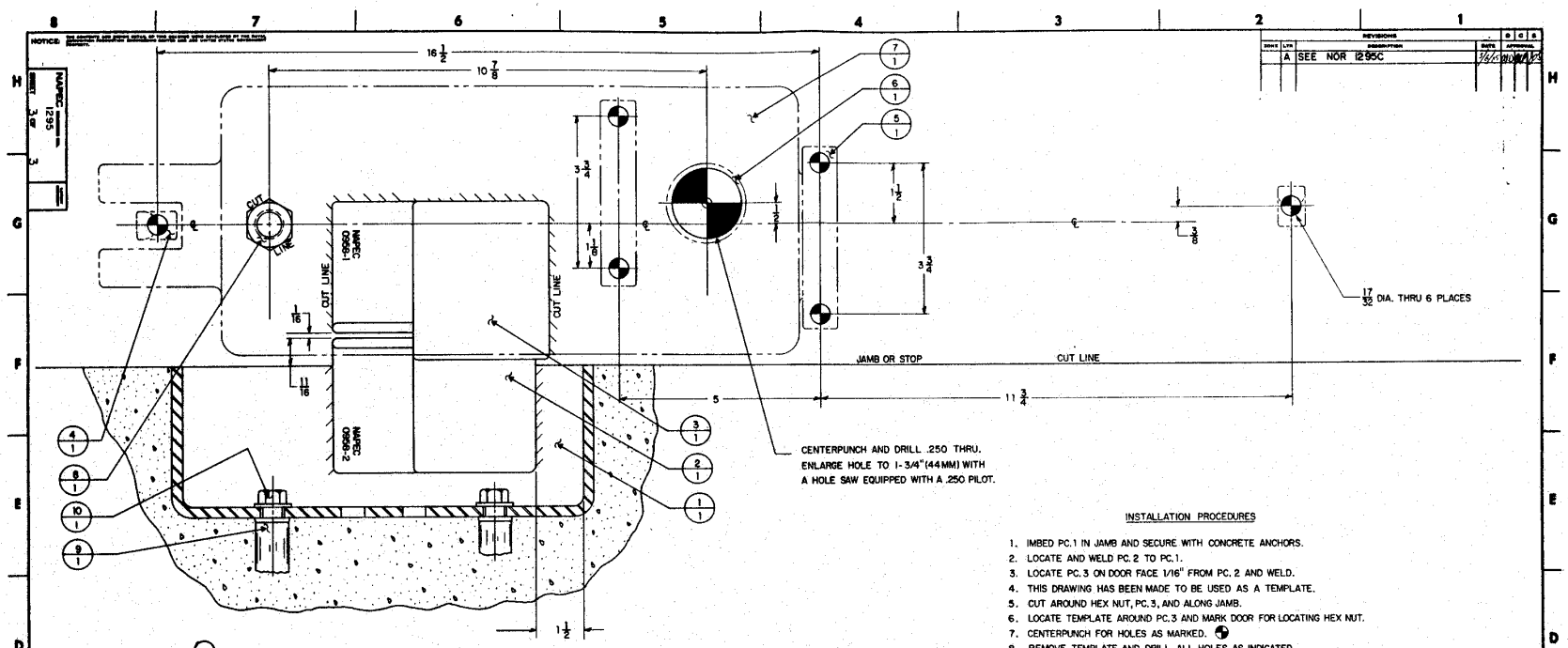

INSTALLATION PROCEDURES

1. IMBED PC.1 IN JAMB AND SECURE WITH CONCRETE ANCHORS.
2. LOCATE AND WELD PC.2 TO PC.1.
3. LOCATE PC.3 ON DOOR FACE 1/16" FROM PC.2 AND WELD.
4. THIS DRAWING HAS BEEN MADE TO BE USED AS A TEMPLATE.
5. CUT AROUND HEX NUT, PC.3, AND ALONG JAMB.
6. LOCATE TEMPLATE AROUND PC.3 AND MARK DOOR FOR LOCATING HEX NUT.
7. CENTERPUNCH FOR HOLES AS MARKED.
8. REMOVE TEMPLATE AND DRILL ALL HOLES AS INDICATED.
9. LOCATE PCS. 4 & 5 AND WELD IN PLACE.
10. INSERT PC.6 AND WELD IN PLACE.
11. WELD PC.8 TO DOOR.

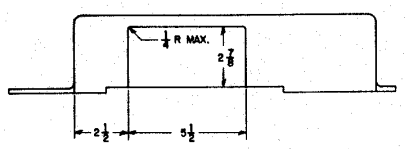

AIB MODIFICATION TO COVER HASP

NOTE: CUT JAMB SIDE OF AIB ONLY

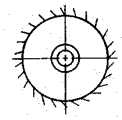

SENSOR BODY

STAPLE

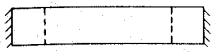

LUG

TYPICAL WELDING PLAN

NOTES:

1. THIS DRAWING IS USABLE FOR LEFT-HAND HINGED DOORS SWINGING OUT.
2. PCS. 2 & 3 CAN BE REPLACED WITH PCS. NAPEC DWG. 0957 ITEMS 1 & 2 RESPECTIVELY FOR LEFT-HAND HINGED DOORS SWINGING IN.
3. PCS. 4, 5, 6 & 7 SHOWN IN PHANTOM FOR CLARITY.

ITEM	NOMENCLATURE	MAT'L.	NO. REQ'D	REMARKS
10	1/2" HEX HD. CAP SCREW	STD.	2	
9	1/2" CONCRET ANCHOR	STD.	2	
8	3/4-10 HEX NUT	SS	1	
7	AIB HOUSING 5532336	304 SS	1	SEE DETAIL
6	SENSOR BODY	304 SS	1	SEE NOTE 3
5	AIB LUG (STD) 5532336	304 SS	2	SEE NOTE 3
4	AIB STAPLE (STD) 5532336	304 SS	2	SEE NOTE 3
3	MK2 MOD 8 LH HASP PC. #0958-1	CA6NM	1	SEE NOTE 2
2	MK2 MOD 8 LH HASP PC. #0958-2	CA6NM	1	SEE NOTE 2
1	WALL MOUNTING BOX NAPEC DWG. 1286	316 SS	1	

REVISIONS			
ZONE	LTR	DESCRIPTION	DATE
	A	SEE NOR 1295C	3/6/79

SYMBOLS: ITEM; WELD HERE; STAPLE; SPOT WELD; SEAM WELD

REMOVE BURRS & SHARP EDGES

DO NOT SCALE THIS DRAWING UNLESS OTHERWISE SPECIFIED. TOLERANCE .005 TO .010 MIN.

APPROVED: Edmund Sims 3-5-79

DESIGNER		DATE
DRAFTER		
DESIGNER		
SUPRV		3/79
DRAFTER	BROH	3-79
TRACER		
ENGINEER		

SCALE: FULL SIZE: F

HIGH SECURITY HASP AND AIB INSTALLATION FOR SINGLE DOORS SLIDING LEFT TO OPEN

INSTALLATION DETAILS

DEPARTMENT OF THE NAVY
NAVAL SEA SYSTEMS COMMAND
NAVAL AMMUNITION PRODUCTION ENGINEERING CENTER
CRANE, INDIANA

NAPEC DRAWING NO. 1295

SHEET 3 OF 3

APPROVED BY

NAPEC 1295 SHEET 3 OF 3

NOTICE: THE CONTENTS AND DESIGN DETAIL OF THIS DRAWING WERE DEVELOPED BY THE NAVAL ORDNANCE PRODUCTION ENGINEERING CENTER AND ARE UNITED STATES GOVERNMENT PROPERTY.

REVISIONS						
ZONE	LTR.	DESCRIPTION	DATE	APPROVAL		
	A	SEE NOR 1297 A				

NAPEC DRAWING NO. 1297 SHEET OF

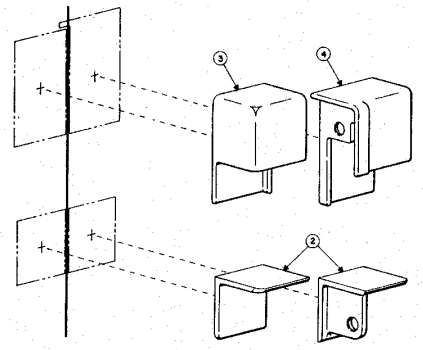

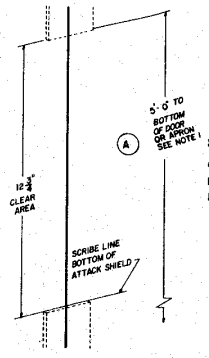

STEP 1

CUT AWAY 12-3/4 INCHES OF ASTRAGAL FROM MAGAZINE DOOR IF ASTRAGAL IS PRESENT.

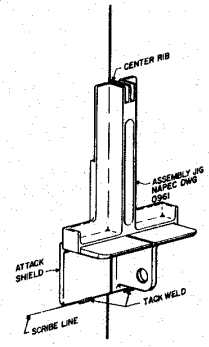

STEP 2

ASSEMBLE ASSEMBLY JIG AND BOTTOM ATTACK SHIELD AND POSITION AS SHOWN WITH THE CENTER RIB OF THE JIG BETWEEN THE TWO DOORS AND THE LOWER EDGE OF THE ATTACK SHIELD ON THE SCRIBED LINE.

TACK WELD ATTACK SHIELD IN PLACE TO APPROPRIATE DOORS.

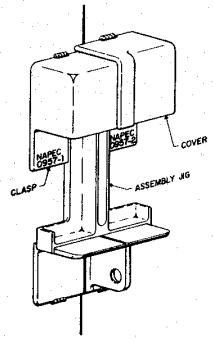

STEP 3

POSITION HASP SECTIONS IN ASSEMBLY JIG AS SHOWN AND TACK WELD IN PLACE

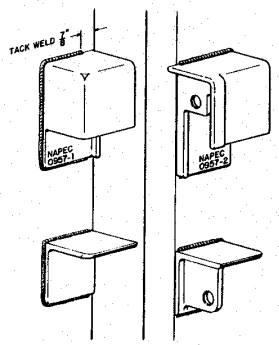

STEP 4

REMOVE ASSEMBLY JIG. OPEN DOOR AND FINISH WELDING.

CAUTION

DO NOT WELD ON DOOR EDGES.

CLOSE DOOR.

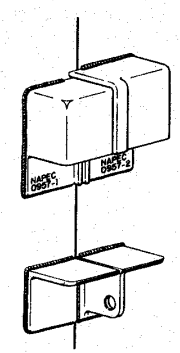

STEP 5

SECURITY HASP AND ATTACK SHIELD INSTALLED.

NOTES:

1. HIGH SECURITY HASP INSTALLATION HEIGHT IS INTENDED TO BE OPERATOR CONVENIENT. FOR STRUCTURES WITH A DOCK OR APRON GREATOR THAN TWO (2) INCHES BELOW THE BOTTOM OF THE DOOR, THE HEIGHT DIMENSION SPECIFIED SHOULD BE MEASURED FROM THE SURFACE OF THE DOCK OR APRON IN LIEU OF THE BOTTOM OF THE DOOR. (A)
2. USE WELDING ROD 310-16, 3/32 DIA.

LIST OF MATERIALS

GFM	ITEM	QTY	DESCRIPTION	NAVAL/COMML DESIG	
	2	1	BOTTOM ATTACK SHIELD	5532334	SHT 3
	3	1	CLASP	5532334	SHT 2
	4	1	COVER	5532334	SHT 2

(A)

STANDARD PLAN-INSTALLATION DETAIL FOR RIGHT HAND ACTIVE DOORS USING HIGH SECURITY HASP #0957

INSTALLATION PROCEDURES

DEPARTMENT OF THE NAVY
NAVAL SEA
SYSTEMS COMMAND
NAVAL AMMUNITION PRODUCTION ENGINEERING CENTER
CRANE, INDIANA

NAPEC DRAWING NO. 1297 SHEET OF

APPROVED 3-5-79
3/79
RROH 3-79
SCALE: SIZE F

NOTICE: THE INFORMATION AND DATA CONTAINED HEREIN IS PROPRIETARY TO THE NAVAL AMMUNITION PRODUCTION ENGINEERING CENTER AND MAY NOT BE USED OR REPRODUCED WITHOUT WRITTEN APPROVAL.

REVISIONS				
SHEET	LTR	DESCRIPTION	DATE	APPROVAL
	A	SEE NOR 1298 A	3/79	

NAPEC 1298 SHEET 1 OF 1

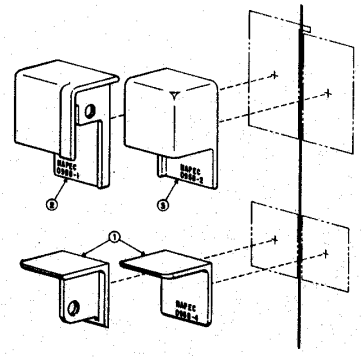

STEP 1

CUT AWAY 12-3/4 INCHES OF ASTRAGAL FROM MAGAZINE DOOR IF ASTRAGAL IS PRESENT.

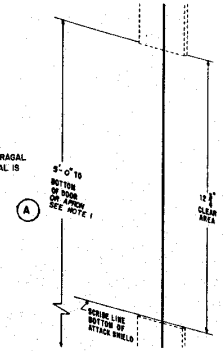

STEP 2

ASSEMBLE ASSEMBLY JIG AND BOTTOM ATTACK SHIELD AND POSITION AS SHOWN, WITH THE CENTER RIB OF THE JIG BETWEEN THE TWO DOORS AND THE LOWER EDGE OF THE ATTACK SHIELD ON THE SCRIBED LINE.

TACK WELD ATTACK SHIELD IN PLACE TO APPROPRIATE DOORS.

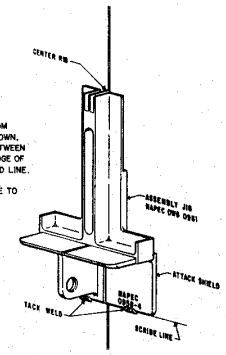

STEP 3

POSITION HASP SECTIONS IN ASSEMBLY JIG AS SHOWN AND TACK WELD IN PLACE.

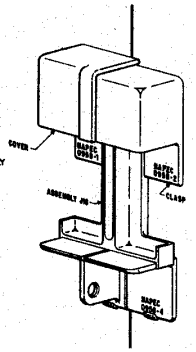

STEP 4

REMOVE ASSEMBLY JIG.

OPEN DOOR AND FINISH WELDING.

CAUTION

DO NOT WELD ON DOOR EDGES.

CLOSE DOOR.

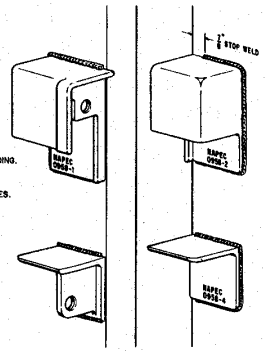

STEP 5

SECURITY HASP AND ATTACK SHIELD INSTALLED.

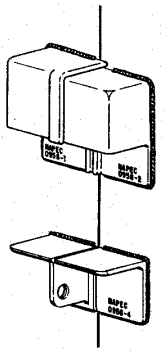

NOTES:

1. HIGH SECURITY HASP INSTALLATION HEIGHT IS INTENDED TO BE OPERATOR CONVENIENT. FOR STRUCTURES WITH A DOCK OR APRON GREATER THAN TWO (2) INCHES BELOW THE BOTTOM OF THE DOOR, THE HEIGHT DIMENSION (A) SPECIFIED SHOULD BE MEASURED FROM THE SURFACE OF THE DOCK OR APRON IN LIEU OF THE BOTTOM OF THE DOOR.
2. USE WELDING ROD 310-16, 5/32 DIA.

LIST OF MATERIALS

GFM	ITEM	QTY	DESCRIPTION	NAVAL/COMM'L DESIG	
	1	1	BOTTOM ATTACK SHIELD	5532335	SHT 3
	2	1	COVER	5532335	SHT 2
	3	1	CLASP	5532335	SHT 2

(A)

SYMBOLS: ITEM; WELD AREA; FIRST ANGLE; THIRD ANGLE

REMOVE BURRS & SHARP EDGES. DO NOT SCALE THIS DRAWING. UNLESS OTHERWISE SPECIFIED DIMENSIONS ARE IN INCHES.

SCALE: NONE; SIZE F

APPROVED 3-5-79

		DATE
DESIGNED		
DRAWN		
TRACED		3/79
CHECKED	KROH	3-79
VERIFIED		
ENGINEER		

STANDARD PLAN– INSTALLATION DETAIL FOR LEFT HAND ACTIVE DOORS USING HIGH SECURITY HASP # 0958

INSTALLATION PROCEDURES

DEPARTMENT OF THE NAVY
NAVAL SEA SYSTEMS COMMAND
NAVAL AMMUNITION PRODUCTION ENGINEERING CENTER
CRANE, INDIANA

NAPEC DRAWING NO. 1298
SHEET 1 OF 1

NOTICE: THE INFORMATION AND RIGHTS ARTICLE OF THIS DRAWING HAVE BEEN PLACED BY THE NAVAL AMMUNITION PRODUCTION ENGINEERING CENTER AND ARE OUTSIDE GOVERNMENT CONTROL.

NAPEC DRAWING NO. 1302 SHEET 1 OF 3

REVISIONS					
DWG	LTR	DESCRIPTION	DATE	APPROVAL	
C 7	A	1 STEP 2 REVISED. WAS DRILL JIG DWG 0964 2 3&4 SEE SHEET 3	10-79	AA	
E 5 F 3	B	ADDED NOTES 1&2 WAS SHEET 4	10-82	JF	
	C	SEE NOR 1302 C	2/61		

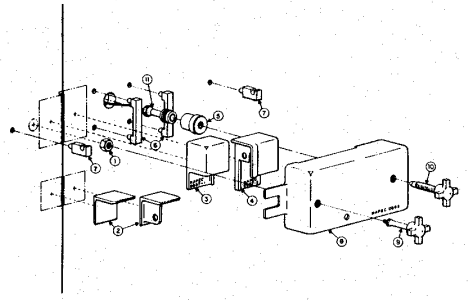

LIST OF MATERIALS

GFM	ITEM	QTY	DESCRIPTION	NAVAL/COMM'L DESIG		
	1	1	HOLD-DOWN NUT	5532336	SHT 3	
	2	1	BOTTOM ATTACK SHIELD	5532334	SHT 3	C
	3	1	CLASP	5532334	SHT 2	
	4	1	COVER	5532334	SHT 2	
	5	1	JACK SCREW BUSHING (SENSOR BODY)	5532336	SHT 5	B
	6	2	A I B LUG	5532336	SHT 2	
	7	2	A I B STAPLE	5532336	SHT 2	
	8	1	A I B HOUSING	5532336	SHT 2	
	9	1	BAR JACK SCREW, INACTIVE LEAF	5532336	SHT 3	
	10	1	BAR JACK SCREW, ACTIVE LEAF	5532336	SHT 4	
	11	1	SENSOR	5532336	SHT 5	B

NOTES:

1. HIGH SECURITY HASP INSTALLATION HEIGHT IS INTENDED TO BE OPERATOR CONVENIENT. FOR STRUCTURES WITH A DOCK OR APROM GREATER THAN TWO (2) INCHES BELOW THE BOTTOM OF THE DOOR, THE HEIGHT DIMENSION SPECIFIED SHOULD BE MEASURED FROM THE SURFACE OF THE DOCK OR APRON IN LIEU OF THE BOTTOM OF THE DOOR.
2. USE WELDING ROD 310-16, 3/32 DIA.

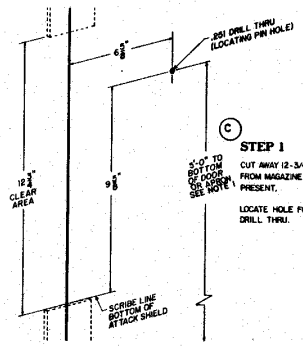

STEP 1

CUT AWAY 12-3/4 INCHES OF ASTRAGAL FROM MAGAZINE DOOR IF ASTRAGAL IS PRESENT.

LOCATE HOLE FOR LOCATING PIN AND DRILL THRU.

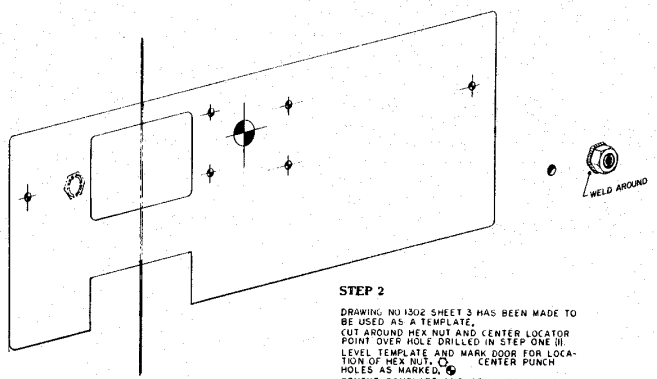

STEP 2

DRAWING NO 1302 SHEET 3 HAS BEEN MADE TO BE USED AS A TEMPLATE.
CUT AROUND HEX NUT AND CENTER LOCATOR POINT OVER HOLE DRILLED IN STEP ONE (1).
LEVEL TEMPLATE AND MARK DOOR FOR LOCATION OF HEX NUT, ⊙. CENTER PUNCH HOLES AS MARKED, ⊕.
REMOVE TEMPLATE AND DRILL HOLES AS INDICATED.

C	-	B
1	2	3
REVISION	STATUS OF SHEETS	

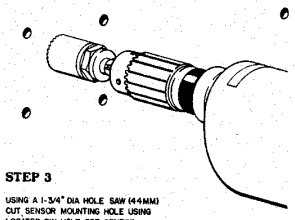

STEP 3

USING A 1-3/4" DIA HOLE SAW (44MM) CUT SENSOR MOUNTING HOLE USING LOCATOR PIN HOLE FOR CENTER.

FINISH WELD HOLD DOWN NUT TO DOOR.

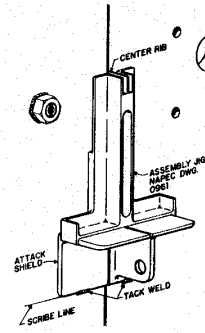

STEP 4

ASSEMBLE ASSEMBLY JIG AND BOTTOM ATTACK SHIELD AND POSITION AS SHOWN WITH THE CENTER RIB OF THE JIG BETWEEN THE TWO DOORS AND THE LOWER EDGE OF THE ATTACK SHIELD ON THE SCRIBED LINE.

TACK WELD ATTACK SHIELD IN PLACE TO APPROPRIATE DOORS.

SYMBOLS: ⊙ WELD AROUND; ⊕ WELD CENTER; ⊕ WELD CENTER; ⊕ WELD CENTER

RIGHTS RESERVED & SHOULD NOT BE USED FOR OTHER PURPOSES UNLESS OTHERWISE STATED. CONTROLS ARE IN EFFECT.

SCALE: NONE

APPROVED 2-5-79

DRAWN		
CHECKED		
DESIGNED		2/78
SUPERV		
DESIGNED	KADH	3-79
PROGRAM		

STANDARD PLAN – ANTI-INTRUSION BAR INSTALLATION DETAIL FOR RIGHT HAND ACTIVE DOORS USING HIGH SECURITY HASP #0957

INSTALLATION PROCEDURES

DEPARTMENT OF THE NAVY
NAVAL SEA
SYSTEMS COMMAND
NAVAL AMMUNITION PRODUCTION ENGINEERING CENTER
CRANE, INDIANA

NAPEC DRAWING NO. 1302

SHEET 1 OF 3

SIZE A

SCALE NONE

RIGHTS RESERVED

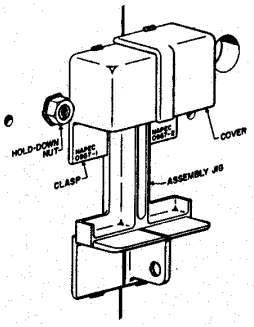

STEP 5

POSITION HASP SECTIONS IN ASSEMBLY JIG AS SHOWN AND TACK WELD IN PLACE.

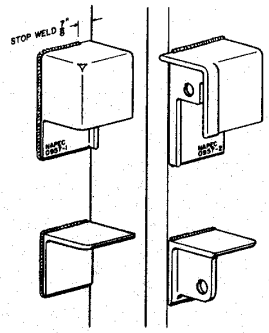

STEP 6

REMOVE ASSEMBLY JIG.

OPEN DOOR AND FINISH WELDING.

CAUTION

DO NOT WELD ON DOOR EDGES.

CLOSE DOOR.

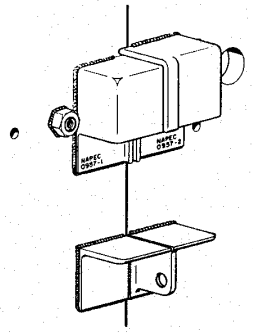

STEP 7

SECURITY HASP AND ATTACK SHIELD INSTALLED.

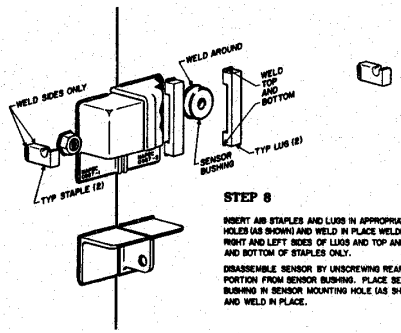

STEP 8

INSERT AIB STAPLES AND LUGS IN APPROPRIATE HOLES (AS SHOWN) AND WELD IN PLACE WELDING RIGHT AND LEFT SIDES OF LUGS AND TOP AND AND BOTTOM OF STAPLES ONLY.

DISASSEMBLE SENSOR BY UNSCREWING REAR PORTION FROM SENSOR BUSHING. PLACE SENSOR BUSHING IN SENSOR MOUNTING HOLE (AS SHOWN) AND WELD IN PLACE.

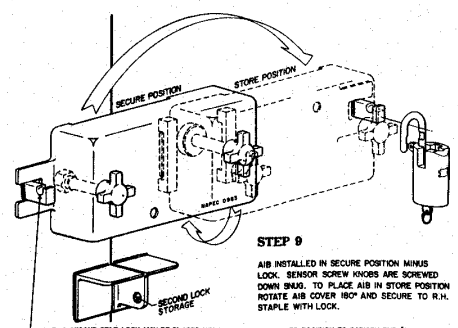

STEP 9

AIB INSTALLED IN SECURE POSITION MINUS LOCK. SENSOR SCREW KNOBS ARE SCREWED DOWN SNUG. TO PLACE AIB IN STORE POSITION ROTATE AIB COVER 180° AND SECURE TO R.H. STAPLE WITH LOCK.

NOTE: A SECOND 831B LOCK MAY BE PLACED HERE WITH AIB IN LOCKED POSITION TO SATISFY THE "TWO MAN RULE." THE SECOND LOCK MAY BE STORED ON ATTACK SHIELD.

APPROVED 3-5-79	STANDARD PLAN – ANTI-INTRUSION BAR INSTALLATION DETAIL FOR RIGHT HAND ACTIVE DOORS USING HIGH SECURITY HASP #0957	DEPARTMENT OF THE NAVY NAVAL SEA SYSTEMS COMMAND NAVAL AMMUNITION PRODUCTION ENGINEERING CENTER CRANE, INDIANA	
3/79			
RROH 3-79	INSTALLATION PROCEDURES	NAPEC DRAWING NO. 1302	
SCALE:	SIZE F	SHEET 2 OF 3	

NOTICE: THE CONTENTS AND DESIGN DETAILS OF THIS DRAWING WERE DEVELOPED BY THE NAVAL AMMUNITION PRODUCTION ENGINEERING CENTER AND ARE UNITED STATES GOVERNMENT PROPERTY.

NAPEC DRAWING NO. 1302 SHEET 2 OF 3

NOTICE: THE CONTENTS AND DESIGN DETAIL OF THIS DRAWING WERE DEVELOPED BY THE NAVAL AMMUNITION PRODUCTION ENGINEERING CENTER (NAPEC) FOR USE BY NAVAL SHORE ESTABLISHMENTS.

NAPEC DRAWING NO. 1302 SHEET 3 OF 3

ZONE	LTR	REVISIONS DESCRIPTION	DATE	APPROVAL
F 7	A	2 CUT LINES ADDED 3 LOCATING HOLES FOR 3/4 HEX NUT AND SLOTS FOR 3/8 Ø BASE SWIVEL PAD ADDED 4. 9/16 Ø WAS 500 Ø	10-79	
E 2	B	SEE NOR 1302C		

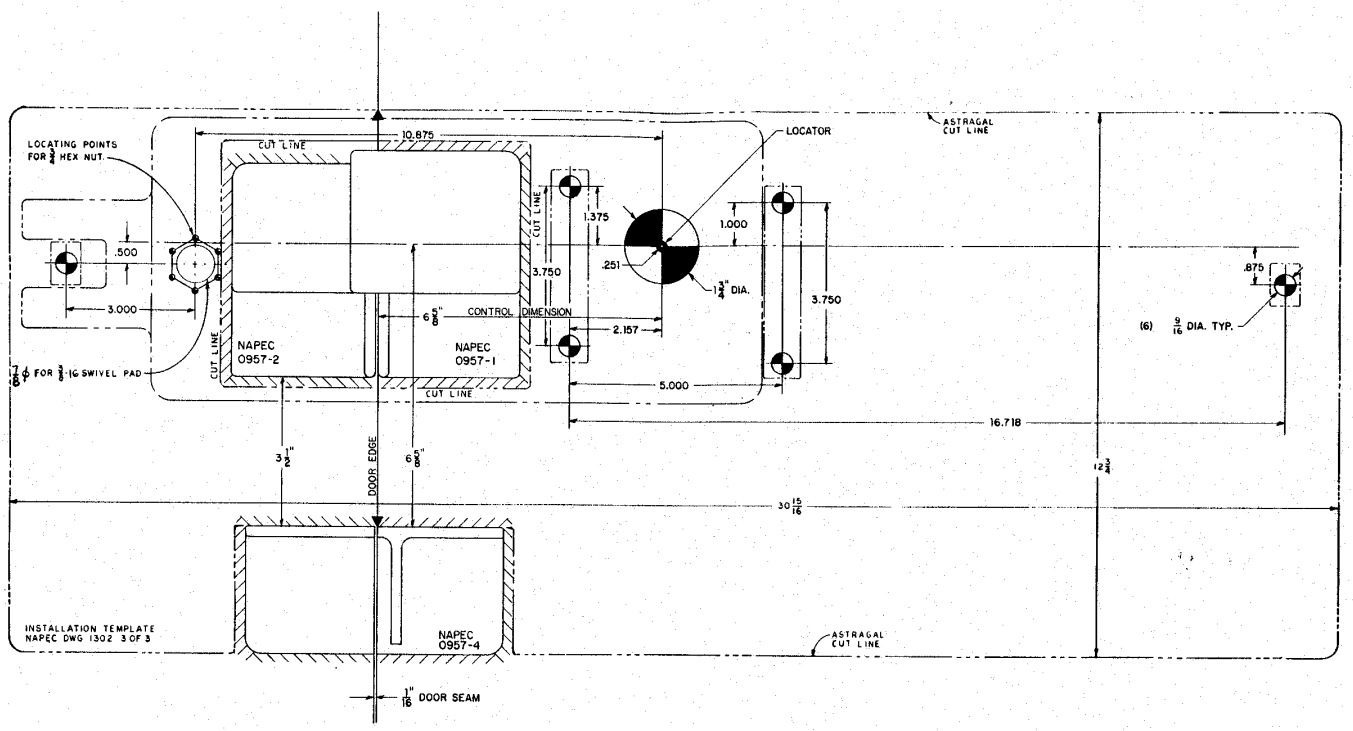

SYMBOLS: FINI; WELD FINI; FINI SHALLOW; WELD FINI SHALLOW

DIMENSIONS NUMBER & GRAND SHOWN DO NOT SCALE THIS DRAWING. UNLESS OTHERWISE SPECIFIED, TOLERANCES ARE ±1 INCH.

SCALE: NONE

SIZE F

APPROVED: 3-5-79

DRAWN: 3/79

DESIGNED: F.R.O.H. 3-79

STANDARD PLAN — ANTI-INTRUSION BAR INSTALLATION DETAIL FOR RIGHT HAND ACTIVE DOORS USING HIGH SECURITY HASP # 0957

HASP & AIB INSTALLATION TEMPLATE

DEPARTMENT OF THE NAVY
NAVAL SEA SYSTEMS COMMAND
NAVAL AMMUNITION PRODUCTION ENGINEERING CENTER
CRANE, INDIANA

NAPEC DRAWING NO. 1302

SHEET 3 OF 3

LATEST REVISION

NOTICE: [illegible]

NAVSEC 1303 SHT 3

REVISIONS						
ZONE	LTR.	DESCRIPTION	DATE	APPROVAL		
C 7	A	1. STEP 2 REVISED. WAS DRILL JIG DWG 1093 2. 3&4 SEE SHEET 3	10-79	AA		
E 5	B	ADDED NOTES 1&2	10-82	JF		
	C	SEE NOR 1303C	3/1/-	[illegible]		

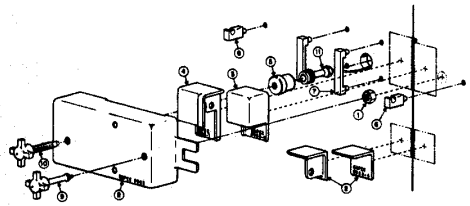

LIST OF MATERIALS					
GFM	ITEM	QTY	DESCRIPTION	NAVAL/COMM'L DESIG	
	1	1	HOLD-DOWN NUT	5532336	SHT 3
	2	1	BOTTOM ATTACK SHIELD	5532335	SHT 5
	3	1	CLASP	5532335	SHT 2
	4	1	COVER	5532335	SHT 2
	5	1	JACK SCREW BUSHING (SENSOR BODY)	5532336	SHT 5
	6	2	A I B LUG	5532336	SHT 2
	7	2	A I B STAPLE	5532336	SHT 2
	8	1	A I B HOUSING	5532336	SHT 2
	9	1	BAR JACK SCREW, INACTIVE LEAF	5532336	SHT 3
	10	1	BAR JACK SCREW, ACTIVE LEAF	5532336	SHT 4
	11	1	SENSOR	5532336	SHT 5

(C)

NOTES:

1. HIGH SECURITY HASP INSTALLATION HEIGHT IS INTENDED TO BE OPERATOR CONVENIENT. FOR STRUCTURES WITH A DOCK OR APRON GREATER THAN TWO (2) INCHES BELOW THE BOTTOM OF THE DOOR, THE HEIGHT DIMENSION SPECIFIED SHOULD BE MEASURED FROM THE SURFACE OF THE DOCK OR APRON IN LIEU OF THE BOTTOM OF THE DOOR.
2. USE WELDING ROD 310-16, 3/32 DIA.

(C)

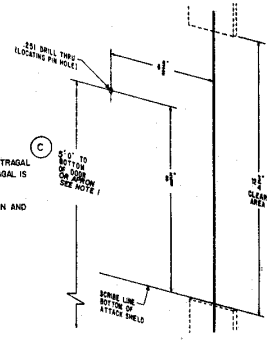

(C)

STEP 1

CUT AWAY 12-3/4 INCHES OF ASTRAGAL FROM MAGAZINE DOOR IF ASTRAGAL IS PRESENT.

LOCATE HOLE FOR LOCATING PIN AND DRILL THRU.

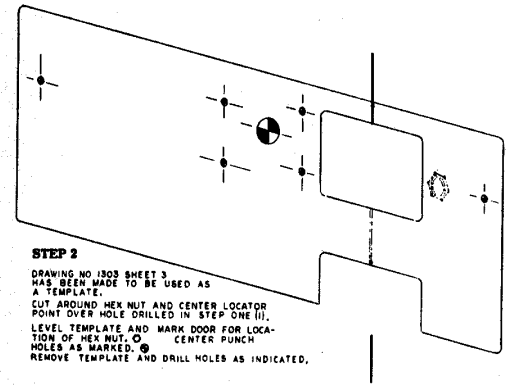

STEP 2

DRAWING NO 1303 SHEET 3 HAS BEEN MADE TO BE USED AS A TEMPLATE.

CUT AROUND HEX NUT AND CENTER LOCATOR POINT OVER HOLE DRILLED IN STEP ONE (1).

LEVEL TEMPLATE AND MARK DOOR FOR LOCATION OF HEX NUT. ⊙ CENTER PUNCH HOLES AS MARKED. ⊗

REMOVE TEMPLATE AND DRILL HOLES AS INDICATED.

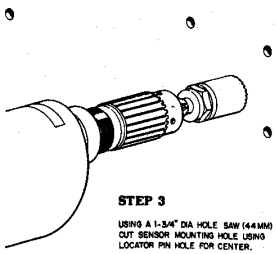

STEP 3

USING A 1-3/4" DIA HOLE SAW (44 MM) CUT SENSOR MOUNTING HOLE USING LOCATOR PIN HOLE FOR CENTER.

FINISH WELD HOLD-DOWN NUT TO DOOR.

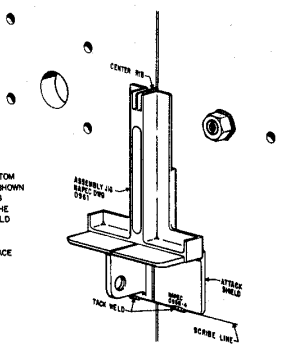

STEP 4

ASSEMBLE ASSEMBLY JIG AND BOTTOM ATTACK SHIELD AND POSITION AS SHOWN WITH THE CENTER RIB OF THE JIG BETWEEN THE TWO DOORS AND THE LOWER EDGE OF THE ATTACK SHIELD ON THE SCRIBED LINE.

TACK WELD ATTACK SHIELD IN PLACE TO APPROPRIATE DOORS.

REVISION STATUS OF SHEETS		
C	-	B
	2	3

(C)

SYMBOLS: FROM / WELD ITEM / FROM ASSEMBLY / WELD ASSEMBLY

DO NOT SCALE THIS DRAWING UNLESS OTHERWISE SPECIFIED. DIMENSIONS ARE IN INCHES.

SCALE: — SIZE: F

APPROVED 3-5-79 — DRAWN — REVIEWED — DESIGN — SIGNED 3/79 — DESIGNED NROH 3-79 — CHECKED — TRACEDUP

STANDARD PLAN – ANTI-INTRUSION BAR INSTALLATION DETAIL FOR LEFT HAND ACTIVE DOORS USING HIGH SECURITY HASP #0958

INSTALLATION PROCEDURES

DEPARTMENT OF THE NAVY
NAVAL SEA SYSTEMS COMMAND
NAVAL AMMUNITION PRODUCTION ENGINEERING CENTER
CRANE, INDIANA

NAPEC DRAWING NO. 1303 SHEET 1 OF 3

SUPERS. DRAWING

NOTICE: THE CONTENTS AND DESIGN DETAIL OF THIS DRAWING WERE DEVELOPED BY THE NAVAL AMMUNITION PRODUCTION ENGINEERING CENTER AND ARE WHITE WATER ENTERPRISES PROPERTY.

NAPEC DRAWING NO. 1303 SHEET 2 OF 3

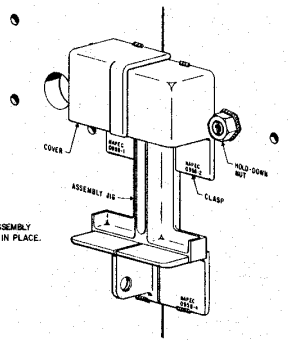

STEP 5

POSITION HASP SECTIONS IN ASSEMBLY JIG AS SHOWN AND TACK WELD IN PLACE.

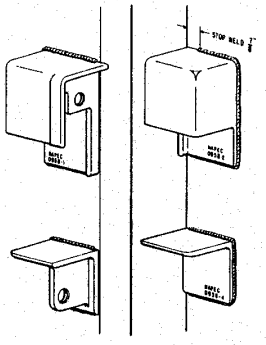

STEP 6

REMOVE ASSEMBLY JIG.

OPEN DOOR AND FINISH WELDING.

CAUTION

DO NOT WELD ON DOOR EDGES.

CLOSE DOOR.

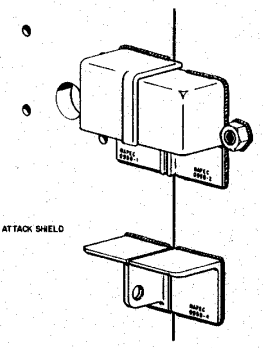

STEP 7

SECURITY HASP AND ATTACK SHIELD INSTALLED.

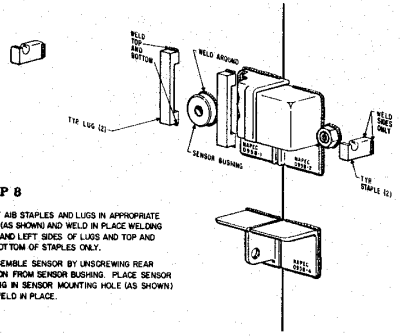

STEP 8

INSERT AIB STAPLES AND LUGS IN APPROPRIATE HOLES (AS SHOWN) AND WELD IN PLACE WELDING RIGHT AND LEFT SIDES OF LUGS AND TOP AND AND BOTTOM OF STAPLES ONLY.

DISASSEMBLE SENSOR BY UNSCREWING REAR PORTION FROM SENSOR BUSHING. PLACE SENSOR BUSHING IN SENSOR MOUNTING HOLE (AS SHOWN) AND WELD IN PLACE.

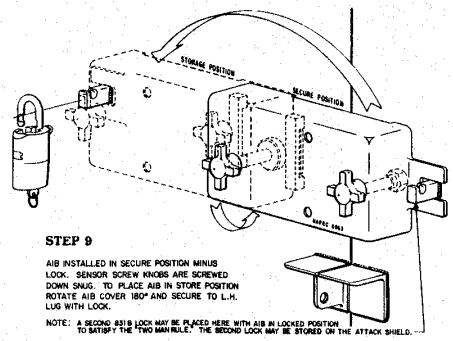

STEP 9

AIB INSTALLED IN SECURE POSITION MINUS LOCK. SENSOR SCREW KNOBS ARE SCREWED DOWN SNUG. TO PLACE AIB IN STORE POSITION ROTATE AIB COVER 180° AND SECURE TO L.H. LUG WITH LOCK.

NOTE: A SECOND 831B LOCK MAY BE PLACED HERE WITH AIB IN LOCKED POSITION TO SATISFY THE "TWO MAN RULE." THE SECOND LOCK MAY BE STORED ON THE ATTACK SHIELD.

STANDARD PLAN – ANTI-INTRUSION BAR INSTALLATION DETAIL FOR LEFT HAND ACTIVE DOORS USING HIGH SECURITY HASP #0958	DEPARTMENT OF THE NAVY NAVAL SEA SYSTEMS COMMAND NAVAL AMMUNITION PRODUCTION ENGINEERING CENTER CRANE, INDIANA		
INSTALLATION PROCEDURES	NAPEC DRAWING NO. 1303 SHEET 2 OF 3		

NOTICE: THE CONTENTS AND SHEET DETAIL OF THIS DRAWING WERE INTEGRATED BY THE NAVAL AMMUNITION PRODUCTION ENGINEERING CENTER AND ARE CENTER FIXED DOCUMENTS.

NAPEC 1303 SHEET 3 OF 3

REVISIONS					
ZONE	LTR.	DESCRIPTION	DATE	APPROVAL	
E 2	A	1. CUT LINES ADDED 2. LOCATING HOLES FOR 3/4 HEX NUT AND SLOTS FOR 3/8 Ø BASE SWIVEL PAD ADDED	10-79	AA	
E 7		3. 9/16 Ø WAS 33/64 Ø			
	B	SEE NOR 1303 B	7/12/82		

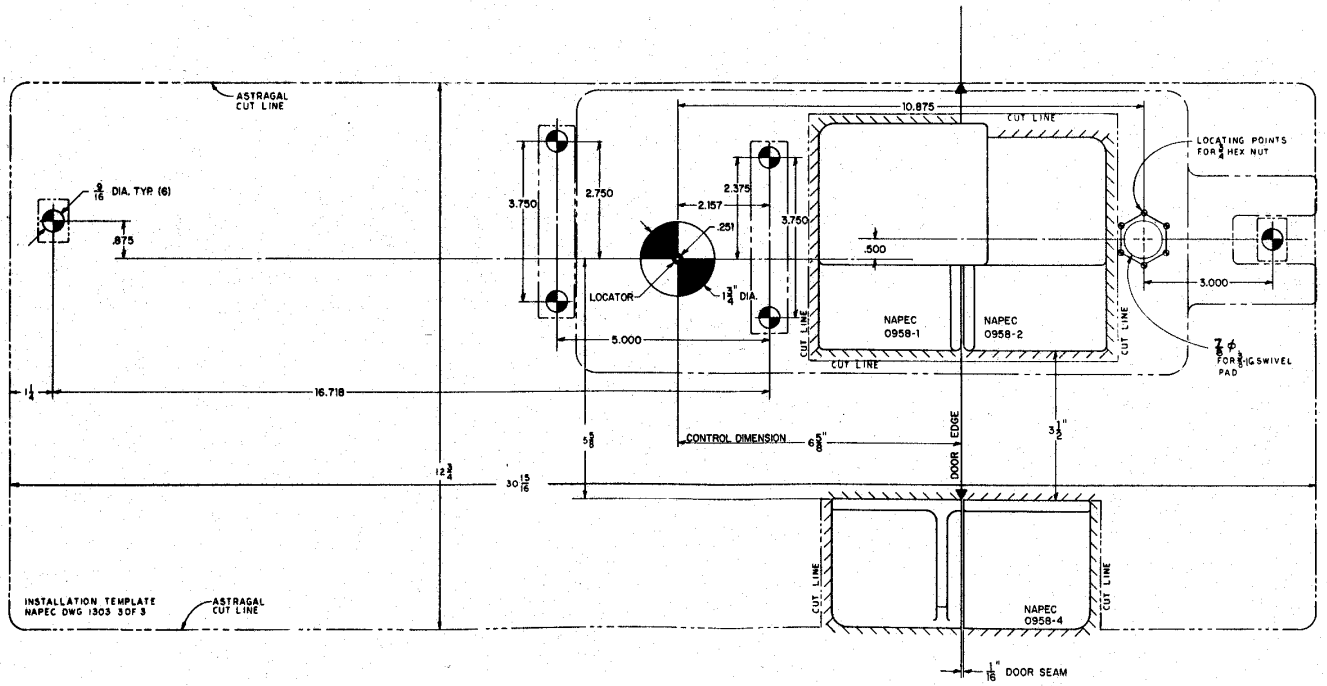

SYMBOLS: TYP; WELD SIDE; TYP EQUAL; TYP EQUAL

REMOVE BURRS & SHARP EDGES. DO NOT SCALE THIS DRAWING UNLESS OTHERWISE INDICATED. DIMENSIONS ARE IN INCHES.

SCALE: SIZE F

APPROVED 3-5-79
DRAWN 3-79
DESIGNED 3-79
CHECKED FROH 3-79
ENGINEER
MANAGER

STANDARD PLAN – ANTI-INTRUSION BAR INSTALLATION DETAIL FOR LEFT HAND ACTIVE DOORS USING HIGH SECURITY HASP #0958

HASP & AIB INSTALLATION TEMPLATE

DEPARTMENT OF THE NAVY
NAVAL SEA SYSTEMS COMMAND
NAVAL AMMUNITION PRODUCTION ENGINEERING CENTER
CRANE, INDIANA

NAPEC DRAWING NO. 1303
SHEET 3 OF 3

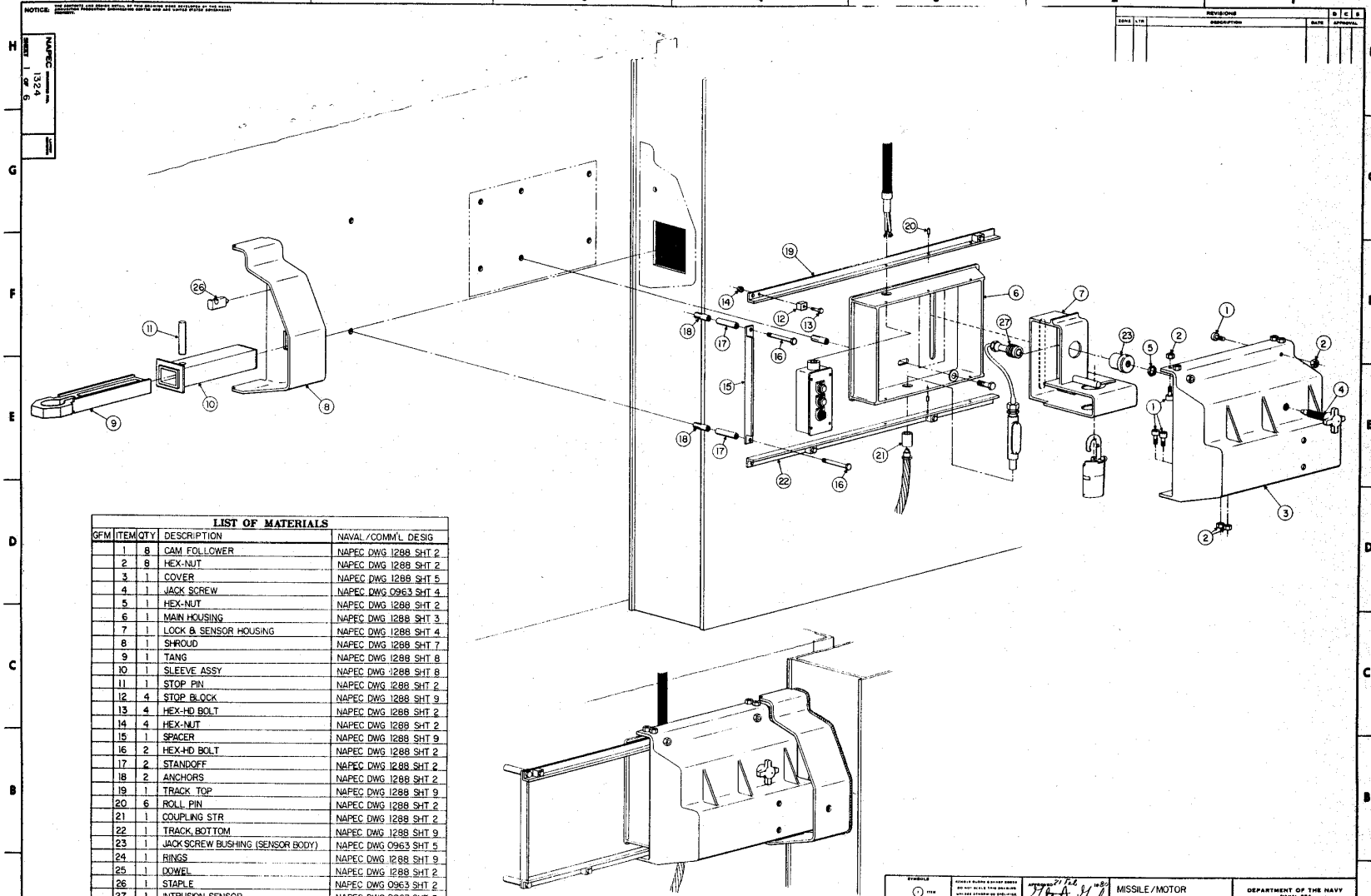

LIST OF MATERIALS				
GFM	ITEM	QTY	DESCRIPTION	NAVAL/COMM'L DESIG
	1	8	CAM FOLLOWER	NAPEC DWG 1288 SHT 2
	2	8	HEX-NUT	NAPEC DWG 1288 SHT 2
	3	1	COVER	NAPEC DWG 1288 SHT 5
	4	1	JACK SCREW	NAPEC DWG 0963 SHT 4
	5	1	HEX-NUT	NAPEC DWG 1288 SHT 2
	6	1	MAIN HOUSING	NAPEC DWG 1288 SHT 3
	7	1	LOCK & SENSOR HOUSING	NAPEC DWG 1288 SHT 4
	8	1	SHROUD	NAPEC DWG 1288 SHT 7
	9	1	TANG	NAPEC DWG 1288 SHT 8
	10	1	SLEEVE ASSY	NAPEC DWG 1288 SHT 8
	11	1	STOP PIN	NAPEC DWG 1288 SHT 2
	12	4	STOP BLOCK	NAPEC DWG 1288 SHT 9
	13	4	HEX-HD BOLT	NAPEC DWG 1288 SHT 2
	14	4	HEX-NUT	NAPEC DWG 1288 SHT 2
	15	1	SPACER	NAPEC DWG 1288 SHT 9
	16	2	HEX-HD BOLT	NAPEC DWG 1288 SHT 2
	17	2	STANDOFF	NAPEC DWG 1288 SHT 2
	18	2	ANCHORS	NAPEC DWG 1288 SHT 2
	19	1	TRACK TOP	NAPEC DWG 1288 SHT 9
	20	6	ROLL PIN	NAPEC DWG 1288 SHT 2
	21	1	COUPLING STR	NAPEC DWG 1288 SHT 2
	22	1	TRACK, BOTTOM	NAPEC DWG 1288 SHT 9
	23	1	JACK SCREW BUSHING (SENSOR BODY)	NAPEC DWG 0963 SHT 5
	24	1	RINGS	NAPEC DWG 1288 SHT 9
	25	1	DOWEL	NAPEC DWG 1288 SHT 2
	26	1	STAPLE	NAPEC DWG 0963 SHT 2
	27	1	INTRUSION SENSOR	NAPEC DWG 0963 SHT 5

MISSILE/MOTOR MAGAZINE LOCKING SYSTEM

TRIDENT

GENERAL ASSEMBLY

DEPARTMENT OF THE NAVY
NAVAL SEA SYSTEMS COMMAND
NAVAL AMMUNITION PRODUCTION ENGINEERING CENTER
CRANE, INDIANA

NAPEC DRAWING NO 1324

SHEET 1 OF 6

NOTICE: THE PROPERTY AND DESIGN DETAIL OF THIS DRAWING WERE DEVELOPED BY THE NAVAL AMMUNITION PRODUCTION ENGINEERING CENTER AND ARE NAVAL SYSTEM EXPENDITURE PROPERTY.

NAPEC DRAWING NO. 1324 SHEET 2 OF 6

REVISIONS

ZONE	LTR	DESCRIPTION	DATE	D	C	B
				APPROVAL		

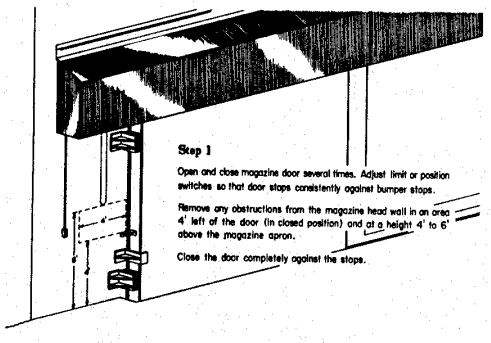

Step 1

Open and close magazine door several times. Adjust limit or position switches so that door stops consistently against bumper stops.

Remove any obstructions from the magazine head wall in an area 4' left of the door (in closed position) and at a height 4' to 6' above the magazine apron.

Close the door completely against the stops.

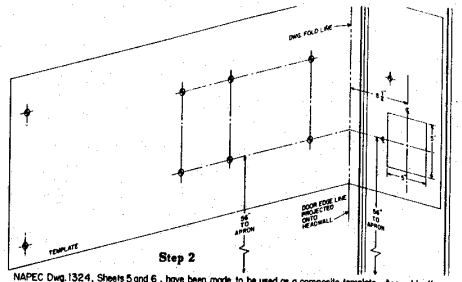

Step 2

NAPEC Dwg.1324, Sheets 5 and 6, have been made to be used as a composite template. Assemble the template sheets according to the instructions on the sheets. Place the composite template on the head wall and fold at the "Fold Line" in order that the end of the door may be marked for the tang cut-out. Mark the wall and door end as indicated. Remove the template and drill the concrete to receive anchors.

Drill hole in door end for staple only after installation of Piece 8 (see Step 7).

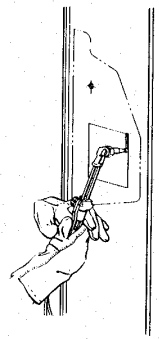

Step 3

Cut out 5" x 5" panel in end of door.

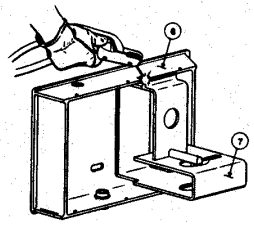

Step 4

Fit projection on back of lock and sensor housing, Piece 7, into groove of main housing, Piece 6. Weld assembled unit.

Step 5

Bolt the housing subassembly to the headwall using 1/2"-13 SAE bolts having a minimum tensile strength of 120 KSI. Use 1/2"-13 concrete anchors.

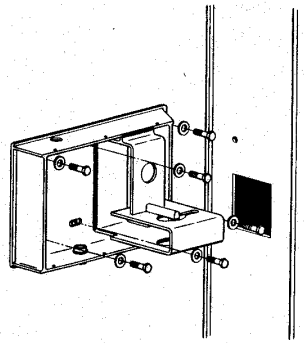

SYMBOLS

1	ITEM
1	WELD ITEM
2	ITEM EXCLUDE
2	BOLT ITEM EXCLUDE

DRAWING NUMBER & DATELINE REQUIRED ON ANY DEVICE THIS DRAWING UNLESS OTHERWISE SPECIFIED DIMENSIONS ARE IN INCHES. TOLERANCE ON: DECIMALS ± .005 FRACTIONS ± 1/64 ANGLES ± 0° 30' INTERPRET DRAWING IN ACCORDANCE WITH STANDARD PRACTICE PER MIL-STD-100.

SCALE — SIZE F

DRAWN	21 Feb 80	
TRACED		
DESIGNED		
CHECKED		
ENGINEER		
MANAGER		
MANUFACTURE		
PRODUCTION		

MISSILE/MOTOR MAGAZINE LOCKING SYSTEM

TRIDENT

GENERAL ASSEMBLY

DEPARTMENT OF THE NAVY
NAVAL SEA
SYSTEMS COMMAND
NAVAL AMMUNITION PRODUCTION ENGINEERING CENTER
CRANE, INDIANA

NAPEC DRAWING NO. 1324

SHEET 2 OF 6

SUPERSEDES

NOTICE: THE CONTENTS AND DESIGN DETAIL OF THIS DRAWING WERE DEVELOPED AT THE NAVAL AMMUNITION PRODUCTION ENGINEERING CENTER AND ARE UNDER STATE GOVERNMENT OWNERSHIP.

REVISIONS					
ZONE	LTR	DESCRIPTION	DATE	APPROVAL	

NAPEC DRAWING NO. 1324 SHEET 3 OF 6

Step 6

Assemble cover tracks, Pieces 15, 16, 17, 19, 20 and 22 to housing assembly and headwall.

Weld tracks to main housing, Piece 6.

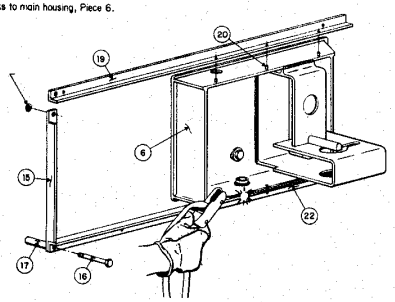

Step 7

Insert sleeve assy. Piece 10, through hole in shroud, Piece 8, and weld in place.
Insert tang, Piece 9, into sleeve assembly, Piece 10.
Install stop pin, Piece 11, through sleeve assembly, Piece 10, and tang, Piece 9. Weld stop pin in place.
Install and weld staple, Piece 26, to shroud, Piece 8. Drill relief hole in door end since Piece 26 length exceeds thickness of Piece 8.

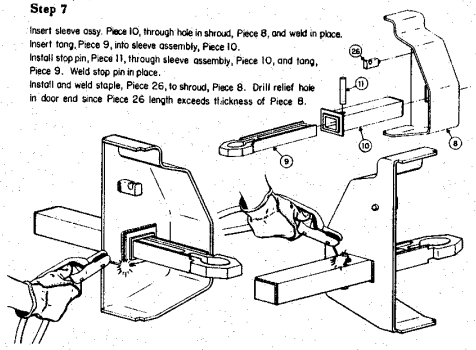

Step 8

An installation jig (NAPEC Dwg. 1288, Sheet 10) is available to align the lock hole of the lock and sensor housing, Piece 7, with the sliding tang and shroud assembly fabricated in Step 7.
Insert shroud assembly into door end hole cut in Step 3. Close door and slide tang into lock housing.
Wedge lower half of installation jig under tang and between tang and lock housing. Insert upper half of installation jig through hole and tang. Adjust shroud position on door end until entire jig, tang, lock housing configuration is stable.

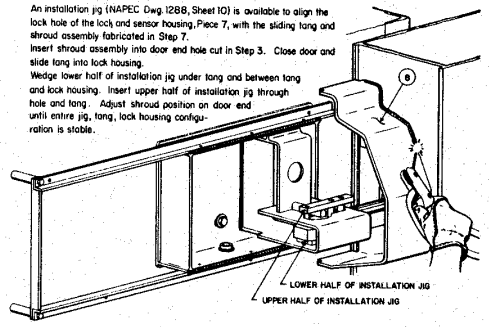

Weld shroud assembly, Piece 8, to door end with continuous weld.
Remove jig parts from around tang and lock housing assembly.

Step 9

Cover, Piece 3, comes with cam followers, Piece 1, (8) installed. Slide cover onto upper and lower track systems and install stop blocks, Piece 12 (4) at ends of track.

Partially thread jackscrew, Piece 4, into cover, Piece 3.

Install locking hex nut, Piece 5, onto jackscrew to prevent inadvertent removal of jackscrew.

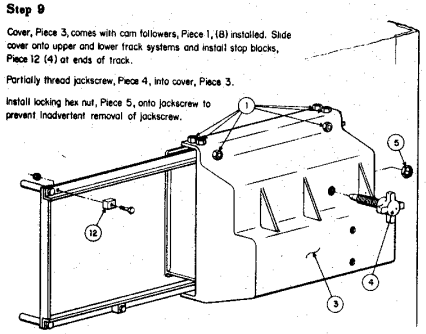

Step 10

Slide cover to the left exposing lock and sensor housing.

Insert sensor body, Piece 23, into the sensor hole. Do not weld until sensor body is is aligned with jackscrew.

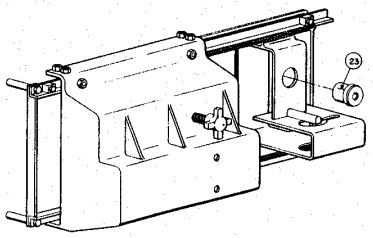

SYMBOLS: ITEM; WELD SPOT; FIELD ASSEMBLY; SHOP ASSEMBLY; FIELD PART ASSEMBLY	REMOVE BURRS & SHARP CORNERS. DO NOT WELD THIS DRAWING UNLESS SPECIFICALLY SPECIFIED. TOLERANCES: DECIMALS ± .005, FRACTIONS ± 1/64, ANGLES ± 30'	21 FEB 1984	MISSILE/MOTOR MAGAZINE LOCKING SYSTEM — TRIDENT
	INTERPRET DRAWING IN ACCORDANCE WITH STANDARD PRACTICES SD 241,010-100	DRAWN / TRACED / SUPERV / MANAGER / ENGINEER / APPROVED	GENERAL ASSEMBLY
	SCALE	SIZE F	

DEPARTMENT OF THE NAVY
NAVAL SEA SYSTEMS COMMAND
NAVAL AMMUNITION PRODUCTION ENGINEERING CENTER
CRANE, INDIANA

NAPEC DRAWING NO. 1324 SHEET 3 OF 6

NOTICE: THE DATA, DESIGNS AND DRAWINGS DETAILED BY THIS REVISION WERE DEVELOPED BY THE NAVAL AMMUNITION PRODUCTION ENGINEERING CENTER AND ARE UNITED STATES GOVERNMENT PROPERTY.

REVISIONS					
ZONE	LTR	DESCRIPTION	DATE	APPROVAL	

NAPEC DRAWING NO. 1324 SHEET 4 OF 6

Step 11

Slide cover to the right.

Rotate jackscrew, Piece 4, until the tapered tip is fully seated in the sensor body. If misalignment exists, (1) back jackscrew out, (2) slide cover to open position, (3) remove sensor body, (4) enlarge sensor hole in housing, and (5) repeat previous steps.

Tack weld sensor body to housing.

Back jackscrew out and slide cover to the left. Finish welding sensor body to housing.

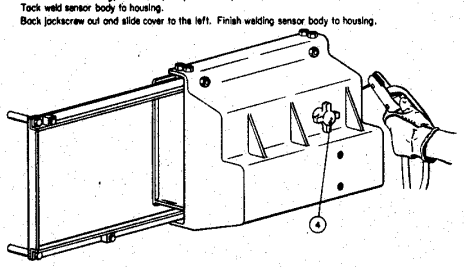

Step 12

Install intrusion sensor, Piece 27, in sensor body, Piece 23.

Install supporting sensor wiring.

NOTE: COVER NOT SHOWN IN THIS ILLUSTRATION FOR CLARITY

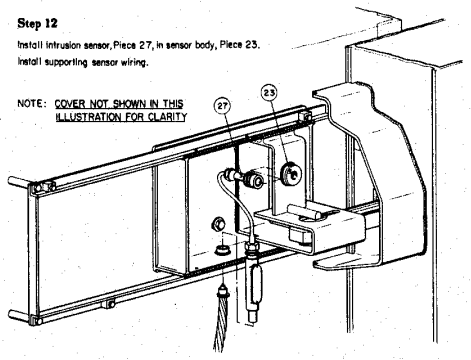

Step 13

Install door controls and supporting electrical equipment.

NOTE: COVER REMOVED IN THIS ILLUSTRATION FOR CLARITY

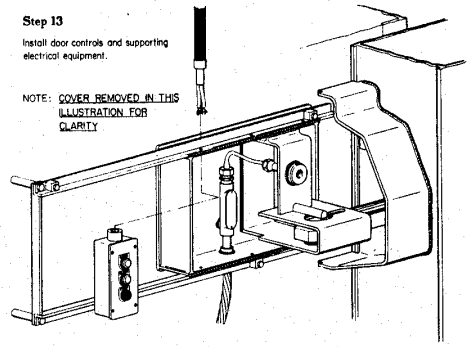

Step 14

The locking method used in the Trident hasp consists of a Sargent and Greenleaf, Model 831B, lock body used in a shear condition between the tang and the lock and sensor housing.

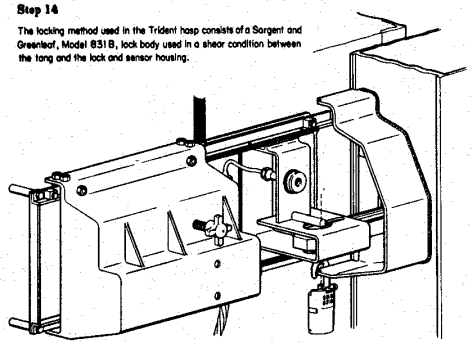

Step 15

Install reflective green tape on tang, Piece 9, as shown to allow for physical check of locked condition.

Drill a 3/4" diameter hole in shroud, Piece 8, as shown to facilitate viewing of tape when cover is closed and sensor deactivated.

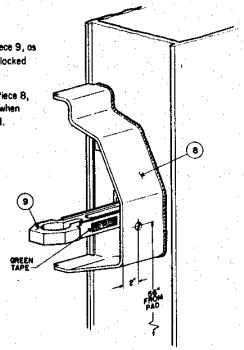

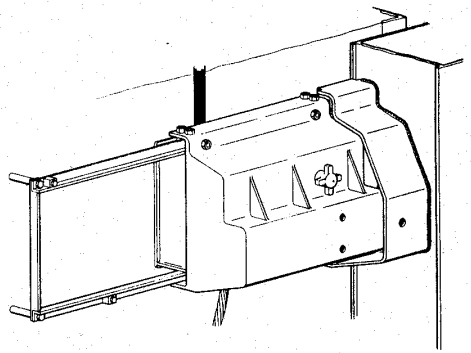

SYMBOLS: 1 TYPE; 2 HOLD TYPE; 3 HOLD STYLUS; 4 HOLD STYLUS; 5 HOLD PIN ENGAGE	ALWAYS REFER TO LATEST DRAWING. DO NOT SCALE THIS DRAWING. UNLESS OTHERWISE SPECIFIED DIMENSIONS ARE IN INCHES. TOLERANCES: DECIMALS ± .005; FRACTIONS ± 1/64; ANGLES ± 1/2°. INTERPRET DRAWING IN ACCORDANCE WITH STANDARD PRACTICES IN MIL-STD-100. SCALE:	2/12/80	MISSILE/MOTOR MAGAZINE LOCKING SYSTEM TRIDENT
		DRAWN	GENERAL ASSEMBLY
		TRACED	
		CHECKED	
		ENGINEER	
		MANAGER	
		APPROVED	
		DESIGNER	

DEPARTMENT OF THE NAVY
NAVAL SEA SYSTEMS COMMAND
NAVAL AMMUNITION PRODUCTION ENGINEERING CENTER
CRANE, INDIANA

NAPEC DRAWING NO. 1324
SHEET 4 OF 6

NOTICE: THE CONTENTS AND DESIGN DETAILS OF THIS DRAWING WERE DEVELOPED BY THE NAVAL AMMUNITION PRODUCTION ENGINEERING CENTER AND ARE UNITED STATES GOVERNMENT PROPERTY.

NAPEC DRAWING NO. 1324
SHEET 5 OF 6

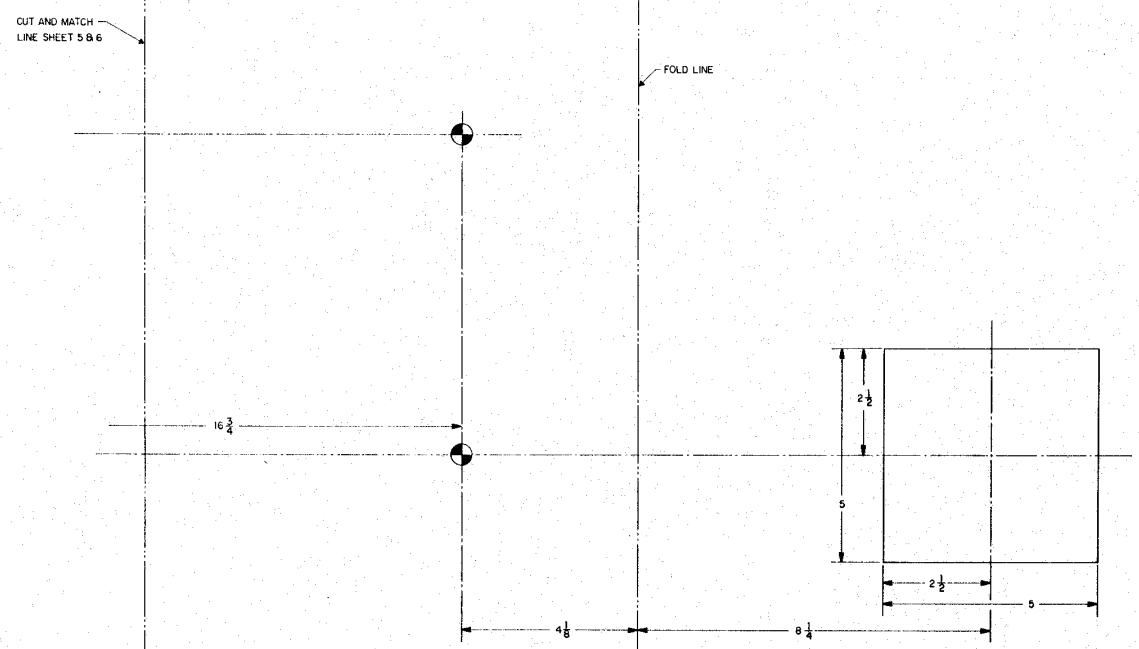

REVISIONS					
ZONE	LTR	DESCRIPTION	DATE	APPROVAL	

COMPOSITE LAYOUT OF MOUNTING HOLES

TRIDENT
HIGH SECURITY
HASP HARDWARE

DEPARTMENT OF THE NAVY
NAVAL SEA
SYSTEMS COMMAND
NAVAL AMMUNITION PRODUCTION
ENGINEERING CENTER
CRANE, INDIANA

NAPEC DRAWING NO. 1324
SHEET 5 OF 6

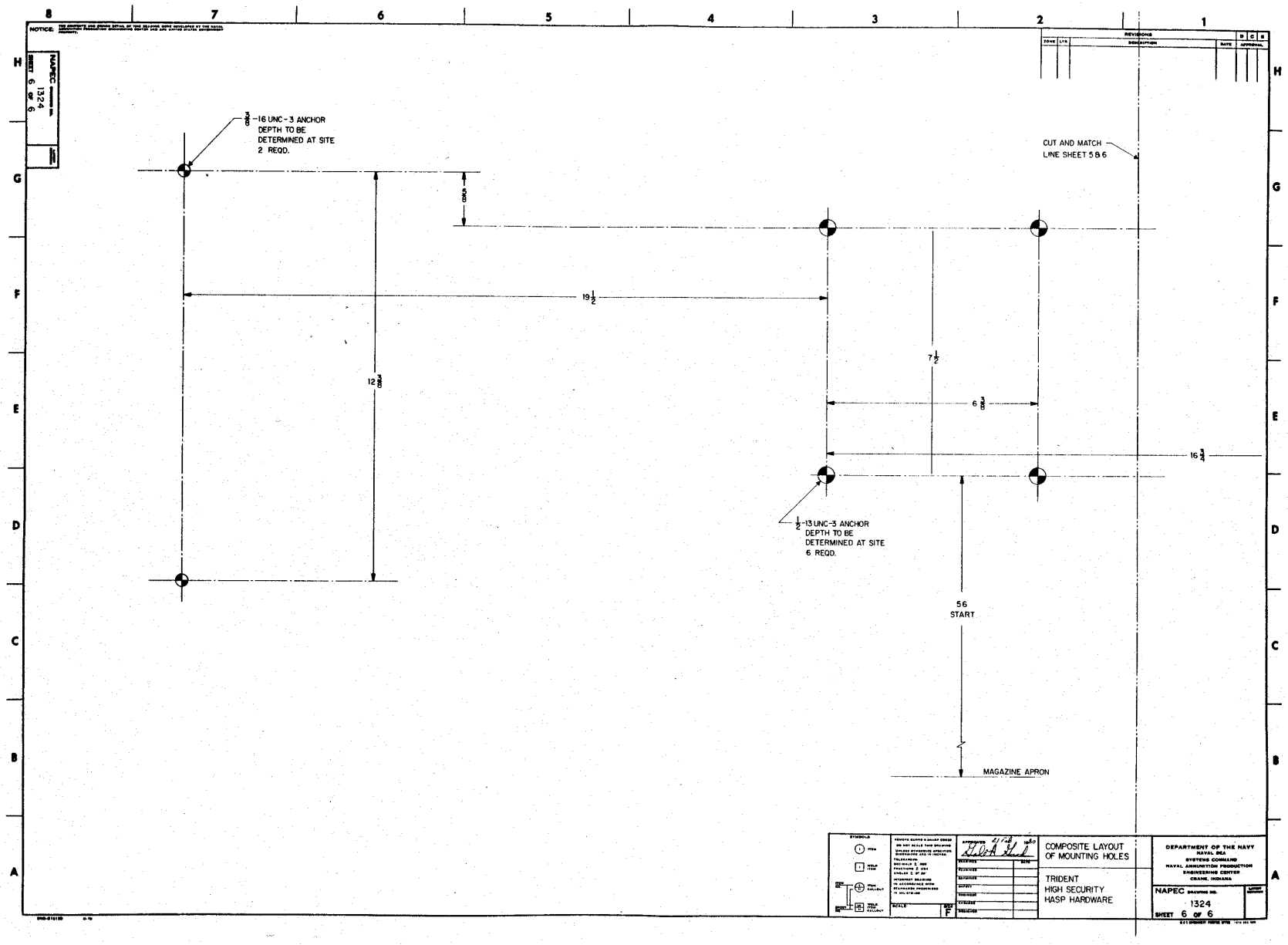

NOTICE:
NAPEC DRAWING NO. 1324
SHEET 6 OF 6
REVISIONS
ZONE
LTR
DESCRIPTION
DATE
APPROVAL
3/8-16 UNC-3 ANCHOR DEPTH TO BE DETERMINED AT SITE 2 REQD.
CUT AND MATCH LINE SHEET 5 & 6
19 1/2
12 3/8
7 1/2
6 3/8
16 3/4
1/2-13 UNC-3 ANCHOR DEPTH TO BE DETERMINED AT SITE 6 REQD.
56 START
MAGAZINE APRON
SYMBOLS
COMPOSITE LAYOUT OF MOUNTING HOLES
TRIDENT HIGH SECURITY HASP HARDWARE
DEPARTMENT OF THE NAVY
NAVAL SEA SYSTEMS COMMAND
NAVAL AMMUNITION PRODUCTION ENGINEERING CENTER
CRANE, INDIANA
NAPEC DRAWING NO. 1324
SHEET 6 OF 6
SIZE F

NOTICE: THE CONTENTS AND DESIGN DETAIL OF THE DRAWING WERE DEVELOPED BY THE NAVAL AMMUNITION PRODUCTION ENGINEERING CENTER AND ARE UNITED STATES GOVERNMENT PROPERTY

NAPEC DRAWING NO. 1382
SHEET 1 OF 2

NOTES
1. INTERPRET DRAWING IN ACCORDANCE WITH MIL-STD-100.
2. REMOVE BURRS AND SHARP EDGES

REVISIONS				D	C	S
ZONE	LTR	DESCRIPTION	DATE	APPROVAL		
	A	SEE NOR 1382 A				

NOTE: INSTALLATION OF LOCK ANTI-ROTATION BLOCKS ALLOWS NAPEC 0957 & 0958 SECURITY HASP SYSTEM TO BE CERTIFIED HIGH SECURITY WITH S & G 826C LOCK.

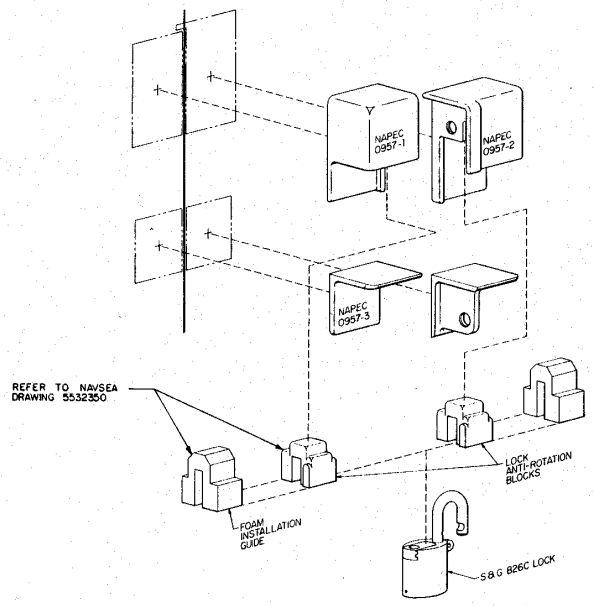

LOCK ANTI-ROTATION BLOCKS INSTALLED IN 0957 HASP

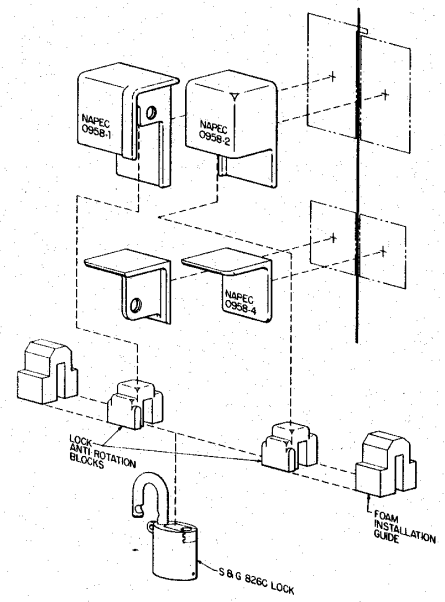

LOCK ANTI ROTATION BLOCKS INSTALLED IN 0958 HASP

FIND NO.	QTY REQ	CODE IDENT	PART, DRAWING OR SPEC NO.	NOMENCLATURE/DESCRIPTION	REMARKS

PARTS LIST

NEXT ASSY	USED ON	DO NOT SCALE DRAWING		INITIALS	DATE
APPLICATION		UNLESS OTHERWISE SPECIFIED DIMENSIONS ARE IN INCHES	EXAMINED		
		TOLERANCES	EXAMINED		
		XX DECIMALS ±	SAFETY		
		XXX DECIMALS ±	ENGINEER		
		FRACTIONS ±	CHECKED		
		ANGLES ±	DESIGNED		
		SCALE	APPROVED		

NAVAL AMMUNITION PRODUCTION ENGINEERING CENTER CRANE, IN 47522

DEPARTMENT OF THE NAVY NAVAL SEA SYSTEMS COMMAND WASHINGTON, DC 20362

INSTALLATION INSTRUCTIONS FOR LOCK ANTI-ROTATION BLOCKS USING NAPEC HASPS 0957 & 0958

SIZE	CODE IDENT NO.	NAVAMPROENGCEN DWG NO
F	53711	NAPEC 1382

SHEET 1 OF 2

NOTICE: THE CONTENTS AND DESIGN DETAIL OF THIS DRAWING WERE DEVELOPED BY THE NAVAL AMMUNITION PRODUCTION ENGINEERING CENTER AND ARE UNITED STATES GOVERNMENT PROPERTY.

NAPEC 1382 SHEET 2 OF 2

NOTES
1. INTERPRET DRAWING IN ACCORDANCE WITH MIL-STD-100.
2. REMOVE BURRS AND SHARP EDGES

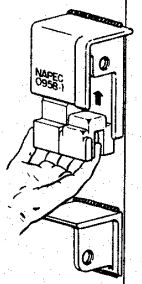

STEP 1

GENERAL:

THE LOCK ANTI-ROTATION BLOCKS HAVE BEEN DESIGNED TO PREVENT THE MEDIUM SECURITY S&G 826C LOCK FROM ROTATING IN THE NAVY'S HIGH SECURITY HASP SYSTEM. THUS IT ACTS AND CAN BE CERTIFIED AS A HIGH SECURITY SYSTEM. HOWEVER, THE EXISTANCE OF SHORT SHACKLED S&G 826C LOCKS MAKES IT NECESSARY TO ADJUST THE FIT OF THE ANTI-ROTATION BLOCKS BEFORE WELDING TO THE HASP.

A. OPEN DOORS AND INSERT ONE ANTI-ROTATION BLOCK AND ITS FOAM GUIDE INTO THE LEFT-HAND HASP UNIT AS SHOWN.

B. INSERT ANOTHER ANTI-ROTATION BLOCK AND ITS FOAM GUIDE INTO THE RIGHT-HAND HASP IN THE SAME MANNER.

(THE FOAM GUIDES ARE DESIGNED TO HOLD THE BLOCKS IN PLACE TO DETERMINE THE FIT.)

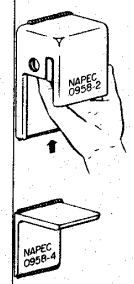

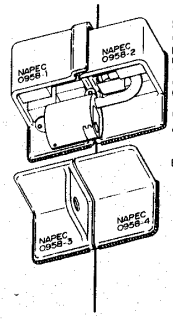

STEP 2

GENERAL:

EACH ANTI-ROTATION BLOCK MUST BE INSERTED UNTIL THE PROTRUDING EAR FITS COMPLETELY IN THE SLOTS OF THE HASP. THE LOCK MAY THEN BE INSTALLED TO CHECK THE FIT.

A. CLOSE DOORS AND INSERT S&G 826C LOCK THROUGH HASP.

B. LOCK THE LOCK AND REMOVE THE KEY.

(1) IF IT LOCKS EASILY, GO ON TO STEP 4.

(2) IF THE LOCK WILL NOT LOCK, IT MAY BE CAUSED BY TOO TIGHT A FIT BETWEEN THE ANTI-ROTATION BLOCKS AND THE LOCK. REMOVE THE LOCK, FOAM GUIDES AND ANTI-ROTATION BLOCKS AND GO TO STEP 3.

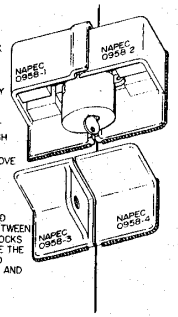

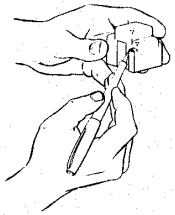

STEP 3

GENERAL:

A BETTER FIT MAY BE OBTAINED BY GRINDING AWAY A PORTION OF THE EAR WHICH FITS IN THE HASP SLOT. REMOVAL OF 1/16 INCH WILL GENERALLY BE SUFFICIENT TO ALLOW THE LOCK TO CLOSE BUT NOT ENOUGH TO DEFEAT THE PURPOSE OF THE BLOCKS. AFTER GRINDING, REPEAT STEPS 1 & 2.

STEP 4

GENERAL:

THE LOCK ANTI-ROTATION BLOCKS DO NOT HAVE TO BE FULL WELDED TO THE HASP TO PROVIDE SECURITY. ALSO, THE BLOCKS MUST BE REMOVED IF THE S&G 831B LOCK IS TO BE USED.

A. TACK WELD ANTI-ROTATION BLOCKS TO THEIR RESPECTIVE HASP HALVES AS SHOWN. (TACK WELD ONLY)!!

B. USE 308-15 OR 308-16 WELDING ROD FOR BEST RESULTS.

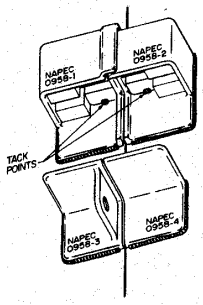

STEP 5

REMOVE FOAM INSTALLATION GUIDES AND DISCARD.

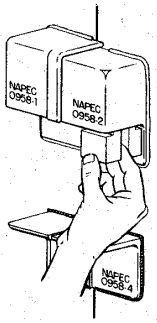

FIND NO.	QTY REQ	CODE IDENT	PART, DRAWING OR SPEC NO.	NOMENCLATURE/DESCRIPTION	REMARKS

PARTS LIST

NEXT ASSY | USED ON

APPLICATION

DO NOT SCALE DRAWING — UNLESS OTHERWISE SPECIFIED, DIMENSIONS ARE IN INCHES

TOLERANCES: XX DECIMALS ±; XXX DECIMALS ±; FRACTIONS ±; ANGLES ±

SCALE

	INITIALS	DATE
EXAMINED		
EXAMINED		
SAFETY		
ENGINEER		
CHECKED		
DESIGNED BY		

APPROVED

NAVAL AMMUNITION PRODUCTION ENGINEERING CENTER CRANE, IN 47522

DEPARTMENT OF THE NAVY NAVAL SEA SYSTEMS COMMAND WASHINGTON, DC 20362

INSTALLATION INSTRUCTIONS FOR LOCK ANTI ROTATION BLOCKS USING NAPEC HASPS 0957 & 0958

SIZE F | CODE IDENT NO. 53711 | NAVAMPRDENGCEN DWG NO. NAPEC 1382

SHEET 2 OF 2

NOTICE: THE CONTENTS AND DESIGN DETAIL OF THIS DRAWING WERE DEVELOPED BY THE NAVAL AMMUNITION PRODUCTION ENGINEERING CENTER AND ARE UNITED STATES GOVERNMENT PROPERTY.

NAPEC SHEET 1403 OF 1

NOTES

1. INTERPRET DRAWING IN ACCORDANCE WITH MIL-STD-100.
2. REMOVE BURRS AND SHARP EDGES
3. HIGH SECURITY HASP INSTALLATION HEIGHT IS INTENDED TO BE OPERATOR CONVENIENT. FOR STRUCTURES WITH A DOOR OR APRON GREATER THAN TWO (2) INCHES BELOW THE BOTTOM OF THE DOOR, THE HEIGHT DIMENSION SPECIFIED SHOULD BE MEASURED FROM THE SURFACE OF THE DOCK OR APRON IN LIEU OF THE BOTTOM OF THE DOOR. (A)

INSTALLATION INSTRUCTIONS

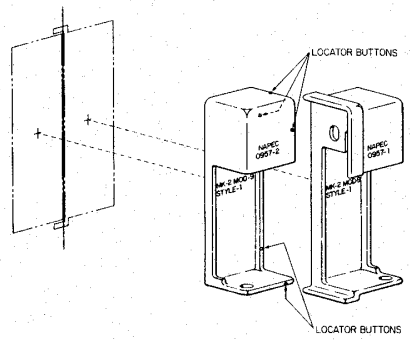

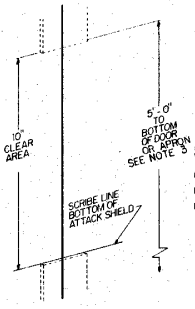

(A)

STEP 1

CUT AWAY 10 INCHES OF ASTRAGAL FROM MAGAZINE DOOR IF ASTRAGAL IS PRESENT.

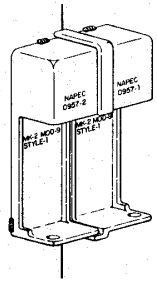

STEP 2

NOTE: LOCATOR BUTTONS HAVE BEEN CAST ONTO THE HASP TO AID INSTALLATION. POSITION HASP ON DOORS USING THE BUTTONS TO ESTABLISH CLEARANCE. TACK WELD HASP ONTO DOORS.

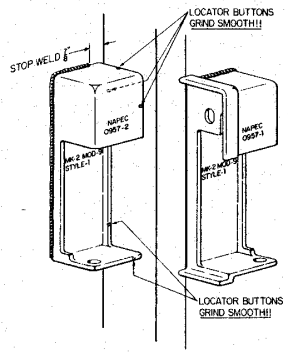

STEP 3

OPEN DOOR AND FINISH WELDING.*

CAUTION

DO NOT WELD ON DOOR EDGES. GRIND OFF LOCATOR BUTTONS!! CLOSE DOORS.

* NOTE: USE WELDING ELECTRODE 310-15 OR 310-16, 3/32 DIA. (A)

APPLICATIONS

RIGHT HAND DOOR OPENING FIRST WITHOUT ASTRACAL

RIGHT HAND DOOR OPENING FIRST WITH ASTRACAL

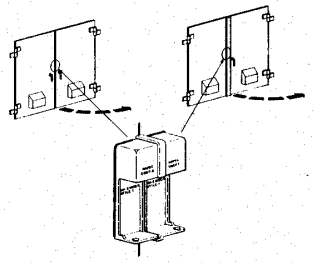

SINGLE DOOR HINGED RIGHT SWINGING OUT

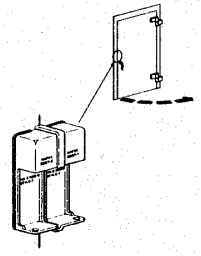

DOUBLE SLIDING DOORS ON INSIDE OR OUTSIDE OF JAMB

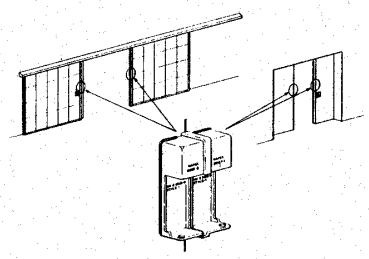

SLIDING DOORS MOVING RIGHT TO OPEN WITH DOOR ON OUTSIDE OF JAMB

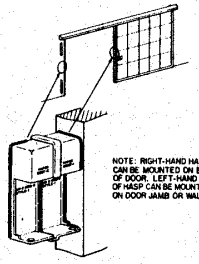

NOTE: RIGHT-HAND HALF CAN BE MOUNTED ON END OF DOOR. LEFT-HAND HALF OF HASP CAN BE MOUNTED ON DOOR JAMB OR WALL.

SINGLE DOOR HINGED LEFT OPENING IN

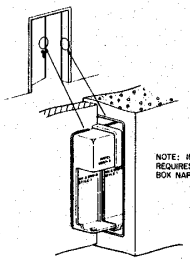

NOTE: INSTALLATION REQUIRES WALL MOUNTING BOX NAPEC 1286

SLIDING DOOR MOVING RIGHT TO OPEN WITH DOOR ON INSIDE OF JAMB

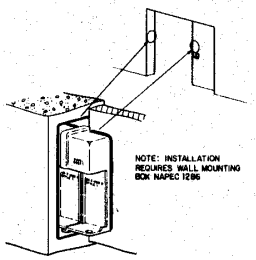

NOTE: INSTALLATION REQUIRES WALL MOUNTING BOX NAPEC 1286

REVISIONS					
ZONE	LTR	DESCRIPTION	DATE	D	C	S APPROVAL
	A	SEE NOR 1403 A			

FIND NO.	QTY REQ	CODE IDENT	PART, DRAWING OR SPEC NO.	NOMENCLATURE/DESCRIPTION	REMARKS

PARTS LIST

NEXT ASSY	USED ON
APPLICATION	

SYMBOLS: ITEM; WELD ITEM; ITEM NO. / ITEM CALLOUT; BILL NO. / WELD ITEM CALLOUT

DO NOT SCALE DRAWING

UNLESS OTHERWISE SPECIFIED DIMENSIONS ARE IN INCHES.

TOLERANCES: XX DECIMALS ±; XXX DECIMALS ±; FRACTIONS ±; ANGLES ±

SCALE

	INITIALS	DATE
EXAMINED		
EXAMINED		
SAFETY		
ENGINEER		
CHECKED		
DESIGNED		

APPROVED 2 AUG 1982

NAVAL AMMUNITION PRODUCTION ENGINEERING CENTER CRANE, IN 47522

DEPARTMENT OF THE NAVY NAVAL SEA SYSTEMS COMMAND WASHINGTON, DC 20362

HIGH SECURITY HASP APPLICATION AND INSTALLATION INSTRUCTIONS FOR MK 2 MOD 9 STYLE 1

SIZE	CODE IDENT NO	NAVAMPRDENGCEN DWG NO
F	53711	1403

SHEET | OF

NOTICE: THE CONTENTS AND DESIGN DETAIL OF THIS DRAWING WERE DEVELOPED BY THE NAVAL AMMUNITION PRODUCTION ENGINEERING CENTER AND ARE UNITED STATES GOVERNMENT PROPERTY.

SHEET 1 OF 1 NAPEC DRAWING NO. 1404

NOTES

1. INTERPRET DRAWING IN ACCORDANCE WITH MIL-STD-100.
2. REMOVE BURRS AND SHARP EDGES
3. HIGH SECURITY HASP INSTALLATION HEIGHT IS INTENDED TO BE OPERATOR CONVENIENT. FOR STRUCTURES WITH A DOCK OR APRON GREATER THAN TWO (2) INCHES BELOW THE BOTTOM OF THE DOOR, THE HEIGHT DIMENSION SPECIFIED SHOULD BE MEASURED FROM THE SURFACE OF THE DOCK OR APRON IN LIEU OF THE BOTTOM OF THE DOOR. (A)

INSTALLATION INSTRUCTIONS

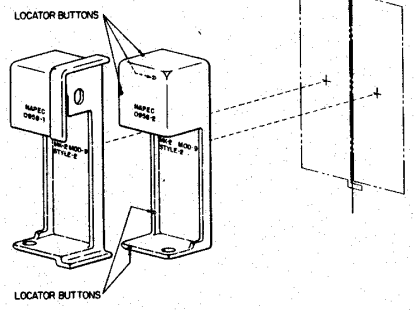

STEP 1

CUT AWAY 10 INCHES OF ASTRAGAL FROM MAGAZINE DOOR IF ASTRAGAL IS PRESENT. (A)

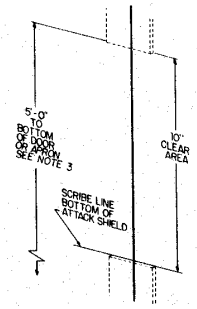

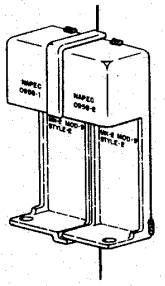

STEP 2

NOTE: LOCATOR BUTTONS HAVE BEEN CAST ONTO THE HASP TO AID INSTALLATION. POSITION HASP ON DOORS USING THE BUTTONS TO ESTABLISH CLEARANCE. TACK WELD HASP ONTO DOORS.

NOTE: USE WELDING ELECTRODE 310-15 OR 310-16, 3/32 DIA. (A)

STEP 3

OPEN DOOR AND FINISH WELDING.*

CAUTION

DO NOT WELD ON DOOR EDGES. GRIND OFF LOCATOR BUTTONS!!

CLOSE DOORS.

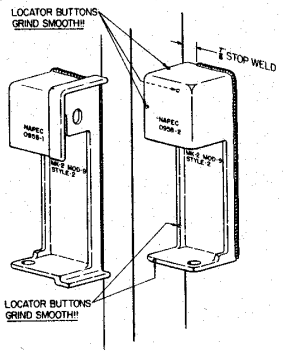

ZONE	LTR	REVISIONS DESCRIPTION	DATE	D C S APPROVAL
	A	SEE NOR 1404 A		

APPLICATIONS

LEFT HAND DOOR OPENING FIRST WITH ASTRACAL

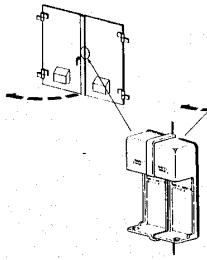

LEFT HAND DOOR OPENING FIRST WITHOUT ASTRACAL

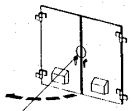

SINGLE DOOR HINGED LEFT SWINGING OUT

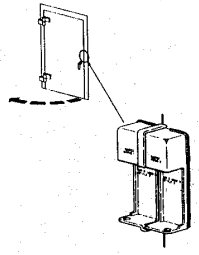

DOUBLE SLIDING DOORS ON INSIDE OR OUTSIDE OF JAMB

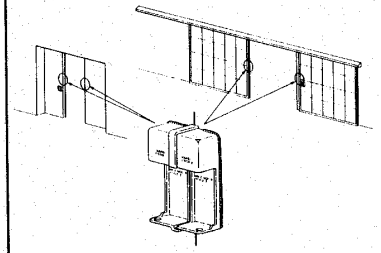

SLIDING DOORS MOVING LEFT TO OPEN WITH DOOR ON OUTSIDE OF JAMB

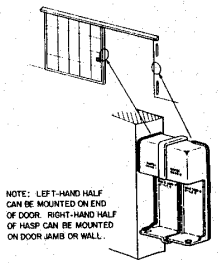

NOTE: LEFT-HAND HALF CAN BE MOUNTED ON END OF DOOR. RIGHT-HAND HALF OF HASP CAN BE MOUNTED ON DOOR JAMB OR WALL.

SINGLE DOOR HINGED RIGHT OPENING IN

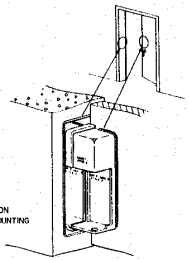

NOTE: INSTALLATION REQUIRES WALL MOUNTING BOX NAPEC 1286

SLIDING DOOR MOVING LEFT TO OPEN WITH DOOR ON INSIDE OF JAMB

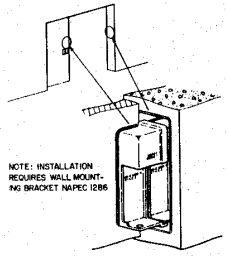

NOTE: INSTALLATION REQUIRES WALL MOUNTING BRACKET NAPEC 1286

FIND NO.	QTY REQ	CODE IDENT	PART, DRAWING OR SPEC NO.	NOMENCLATURE/DESCRIPTION	REMARKS

PARTS LIST

NEXT ASSY	USED ON	APPLICATION	

SYMBOLS: (1) ITEM; (A) WELD ITEM; (B) ITEM CAUTION; (C) WELD ITEM CAUTION

DO NOT SCALE DRAWING

UNLESS OTHERWISE SPECIFIED, DIMENSIONS ARE IN INCHES

TOLERANCES
XX DECIMALS ±
XXX DECIMALS ±
FRACTIONS ±
ANGLES ±
SCALE

	INITIALS	DATE
EXAMINED		
EXAMINED		
SAFETY		
ENGINEER		
CHECKED		
REQUIRED STAMP		
APPROVED	2 Aug 82	

NAVAL AMMUNITION PRODUCTION ENGINEERING CENTER CRANE, IN 47522

DEPARTMENT OF THE NAVY NAVAL SEA SYSTEMS COMMAND WASHINGTON, DC 20362

HIGH SECURITY HASP APPLICATION AND INSTALLATION INSTRUCTIONS FOR MK 2 MOD 9 STYLE 2

SIZE	CODE IDENT NO.	NAVAMPRDENGCEN DWG NO.
F	53711	1404

SHEET 1 OF 1

NOTICE: THE CONTENTS AND DESIGN DETAIL OF THIS DRAWING WERE DEVELOPED BY THE NAVAL AMMUNITION PRODUCTION ENGINEERING CENTER AND ARE UNITED STATES GOVERNMENT PROPERTY.

NAVSEA 5532334 SHEET 1 OF 3

NOTES

1. INTERPRET DRAWING IN ACCORDANCE WITH MIL-STD-100.
2. REMOVE BURRS AND SHARP EDGES
3. INVESTMENT CASTING TO MIL-C-6021 CLASS 2B.
4. ZYGLO PER MIL-I-6866
5. FINISH NAS-823-C-12
6. REMELT MATL ACCEPTABLE, NO SLAG OR FOREIGN ALLOYS.
7. SURFACE REQT: NAS 823 C/25
8. LINEAR TOL (CASTINGS)
   UP TO 1/2" ±.007
   " " 1" ±.010
   " " 2 ±.013
   " " 3 ±.016
   " " 4 ±.019
   " " 5 ±.022
   " " 6 ±.025
   " " 7 ±.028
   " " 8 ±.031
   " " 9 ±.034
   " " 10 ±.037
   MAX. VARIATION ±.040
9. FORMERLY NAPEC DWG. NO. 0957 REV C

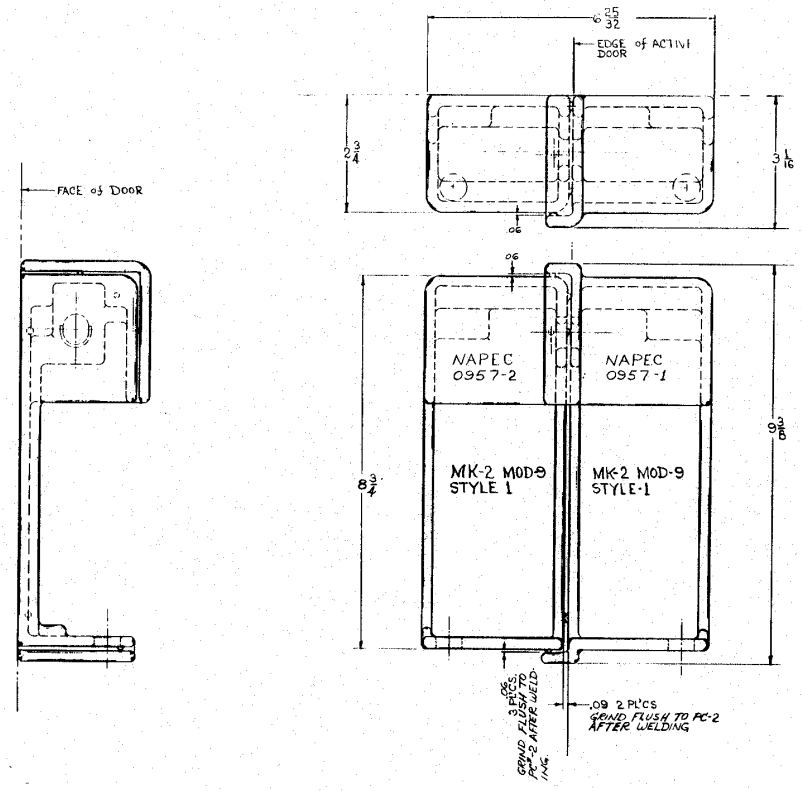

REVISIONS						
ZONE	LTR	DESCRIPTION	DATE	APPROVAL		
	A	SEE NOR 5532334 A	3/4/82			

A	A	A
1	2	3
REVISION STATUS OF SHEETS		

FIND NO.	QTY REQ	CODE IDENT	PART, DRAWING OR SPEC NO.	NOMENCLATURE/DESCRIPTION	REMARKS
-2	1		CF-3 SEE NOTES AMS 5370	CASTING, PASSIVE DOOR	SEE NOTES 1 THRU 8
-1	1			CASTING, ACTIVE DOOR	

PARTS LIST

NEXT ASSY	USED ON
APPLICATION	

SYMBOLS: ITEM; WELD ITEM; ITEM CALLOUT; WELD ITEM CALLOUT

DO NOT SCALE DRAWING
UNLESS OTHERWISE SPECIFIED DIMENSIONS ARE IN INCHES
TOLERANCES: XX DECIMALS, XXX DECIMALS, FRACTIONS, ANGLES — SEE NOTE #8
SCALE: FULL

	INITIALS	DATE
EXAMINED		
EXAMINED		
SAFETY		
ENGINEER		
CHECKED		
DESIGNED	GJS	4-82
APPROVED	22 Sep 1982	

NAVAL AMMUNITION PRODUCTION ENGINEERING CENTER CRANE, IN 47522

DEPARTMENT OF THE NAVY NAVAL SEA SYSTEMS COMMAND WASHINGTON, DC 20362

HIGH SECURITY HASP MK-2 MOD-9
HINGED OR SLIDING HORIZONTAL DOOR
RIGHT-HAND STYLE-1

SIZE F | CODE IDENT NO. 63711 | NAVSEA 5532334 | DWG NO. | DATE 5-82

SHEET 1 OF 3

NOTICE: THE CONTENTS AND DESIGN DETAIL OF THIS DRAWING WERE DEVELOPED BY THE NAVAL AMMUNITION PRODUCTION ENGINEERING CENTER AND ARE UNITED STATES GOVERNMENT PROPERTY

NAVSEA DRAWING NO. 5532334 SHEET 3 OF 3

NOTES
1. INTERPRET DRAWING IN ACCORDANCE WITH MIL-STD-100.
2. REMOVE BURRS AND SHARP EDGES

REVISIONS					
ZONE	LTR	DESCRIPTION	DATE	APPROVAL	
	A	SEE NOR 5532334 A			

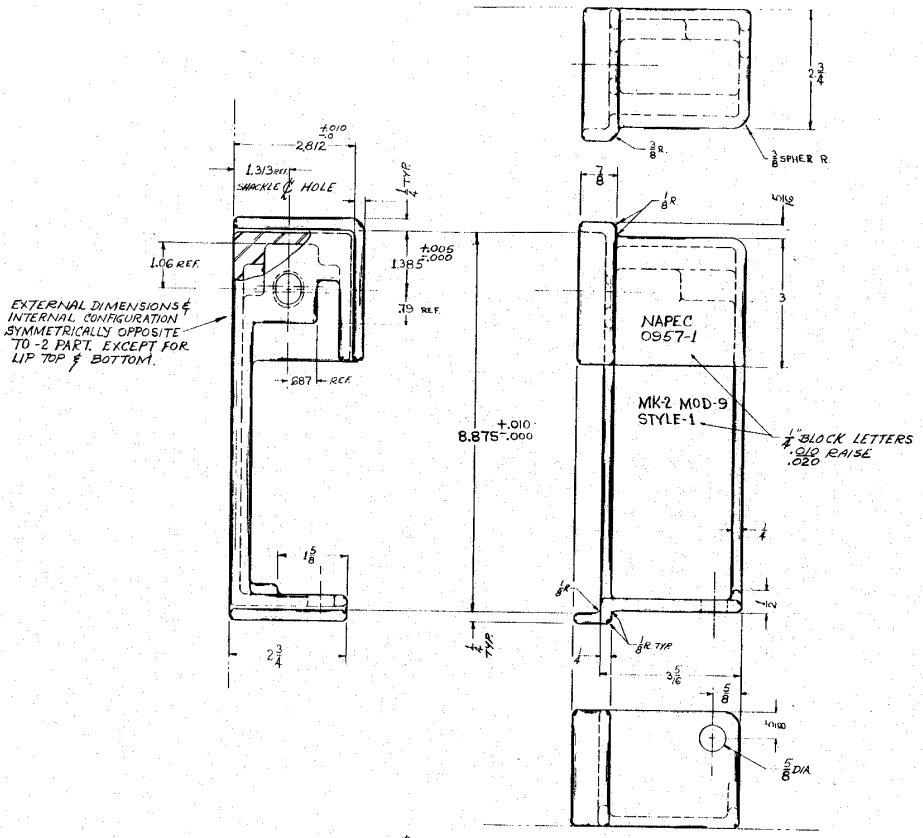

(1) NAPEC # 0957
CASTING, ACTIVE DOOR
STAINLESS STEEL 304 L CF-3
AMS 5370

FIND NO.	QTY REQ	CODE IDENT	PART, DRAWING OR SPEC NO.	NOMENCLATURE/DESCRIPTION	REMARKS
-1	1		304 L CF-3	CASTING, ACTIVE DOOR	SEE NOTES SHT. #1

PARTS LIST

NEXT ASSY	USED ON	SYMBOLS: ITEM; WELD ITEM; ITEM CALLOUT; WELD ITEM CALLOUT	DO NOT SCALE DRAWING. UNLESS OTHERWISE SPECIFIED DIMENSIONS ARE IN INCHES. TOLERANCES: XX DECIMALS ± SEE; XXX DECIMALS ± SHT.; FRACTIONS ± #1; ANGLES ±	INITIALS / DATE: EXAMINED, EXAMINED, SAFETY, ENGINEER, CHECKED, DESIGNED GJS 4-82	NAVAL AMMUNITION PRODUCTION ENGINEERING CENTER CRANE, IN 47522 — DEPARTMENT OF THE NAVY NAVAL SEA SYSTEMS COMMAND WASHINGTON, DC 20362
APPLICATION			SCALE: FULL	APPROVED EL INGP 10 82	HIGH SECURITY HASP MK-2 MOD-9 HINGED OR SLIDING HORIZONTAL DOOR DETAIL
					SIZE F — CODE IDENT NO. 53711 — NAVSEA 5532334 — DWG NO — DATE 9-82 — SHEET 3 OF 3

NOTICE: THE CONTENTS AND DESIGN DETAIL OF THE DRAWING WERE DEVELOPED BY THE NAVAL AMMUNITION PRODUCTION ENGINEERING CENTER AND ARE UNITED STATES GOVERNMENT PROPERTY

NAVSEA 5532334 SHEET 2 OF 3

NOTES
1. INTERPRET DRAWING IN ACCORDANCE WITH MIL-STD-100.
2. REMOVE BURRS AND SHARP EDGES

ZONE	LTR	REVISIONS DESCRIPTION	DATE	D	C	S APPROVAL
	A	SEE NOR 5532334 A	5/6/87			

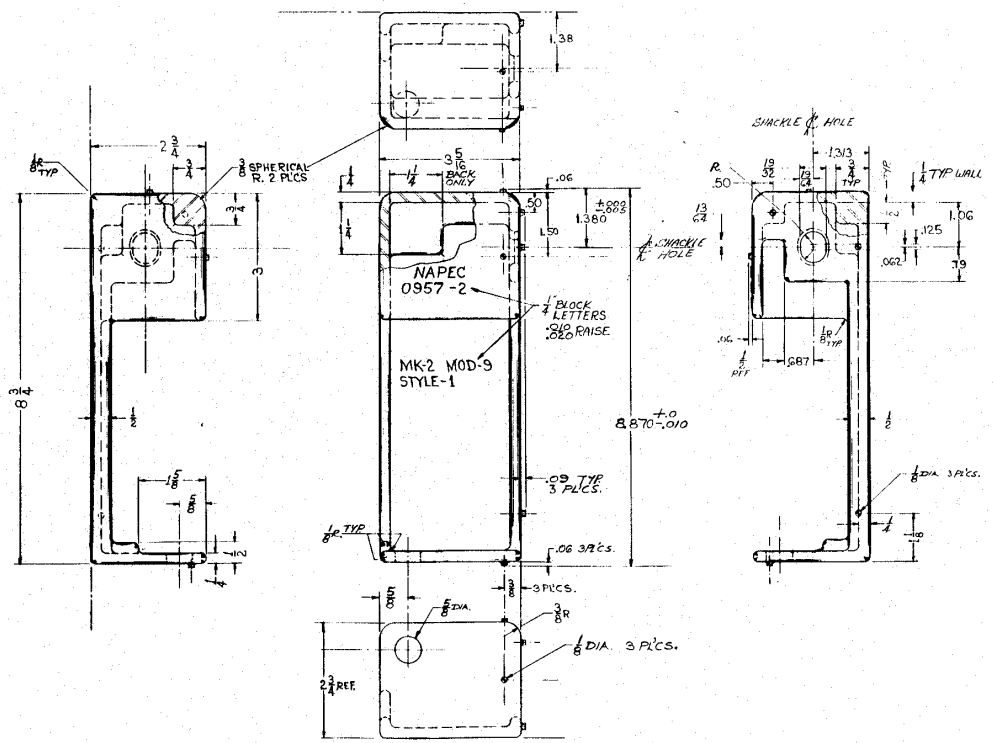

(2) NAPEC # 0957
CASTING, PASSIVE DOOR
STAINLESS STEEL 304L CF-3
AMS 5370

FIND NO.	QTY REQ	CODE IDENT	PART, DRAWING OR SPEC NO.	NOMENCLATURE/DESCRIPTION	REMARKS
-2	1		304L, CF-3	CASTING, PASSIVE DOOR	SEE NOTES SHT #1

PARTS LIST

NEXT ASSY	USED ON
APPLICATION	

SYMBOLS: ITEM; WELD ITEM; ITEM CALLOUT; WELD ITEM CALLOUT

DO NOT SCALE DRAWING
UNLESS OTHERWISE SPECIFIED, DIMENSIONS ARE IN INCHES
TOLERANCES: XX DECIMALS ± SEE; XXX DECIMALS ± SHEET; FRACTIONS ± #1; ANGLES ±
SCALE: FULL

	INITIALS	DATE
EXAMINED		
EXAMINED		
SAFETY		
ENGINEER		
CHECKED		
DESIGNED	GJS	4-82
APPROVED	22/2	82

NAVAL AMMUNITION PRODUCTION ENGINEERING CENTER CRANE, IN 47522

DEPARTMENT OF THE NAVY NAVAL SEA SYSTEMS COMMAND WASHINGTON, DC 20362

HIGH SECURITY HASP MK-2 MOD-9 HINGED OR SLIDING HORIZONTAL DOOR DETAIL

SIZE	CODE IDENT NO.	NAVSEA	DWG NO	DATE
F	53711	5532334		9-82

SHEET 2 OF 3

NOTICE: THE CONTENTS AND DESIGN DETAIL OF THIS DRAWING WERE DEVELOPED BY THE NAVAL AMMUNITION PRODUCTION ENGINEERING CENTER AND ARE UNITED STATES GOVERNMENT PROPERTY

NAVSEA DRAWING NO. 5532335 SHEET 1 OF 3

(A)

NOTES
1. INTERPRET DRAWING IN ACCORDANCE WITH MIL-STD-100.
2. REMOVE BURRS AND SHARP EDGES
3. INVESTMENT CASTINGS PER MIL-C-6021 CLASS 2B
4. ZYGLO PER MIL-I-6866
5. FINISH NAS-823-C12
6. REMELT MAT'L. ACCEPTABLE, NO SLAG OR FOREIGN ALLOYS.
7. SURFACE REQ'T. NAS-823C/25.
8. LINEAR TOL. (CASTINGS)
   UP TO 1/2" ±.007
   " " 1" ±.010
   " " 2" ±.013
   " " 3" ±.016
   " " 4" ±.019
   " " 5" ±.022
   " " 6" ±.025
   " " 7" ±.028
   " " 8" ±.031
   " " 9" ±.034
   " " 10" ±.037
   MAX. VARIATION .040
9. FORMERLY NAPEC DWG. NO. 0958 REV C

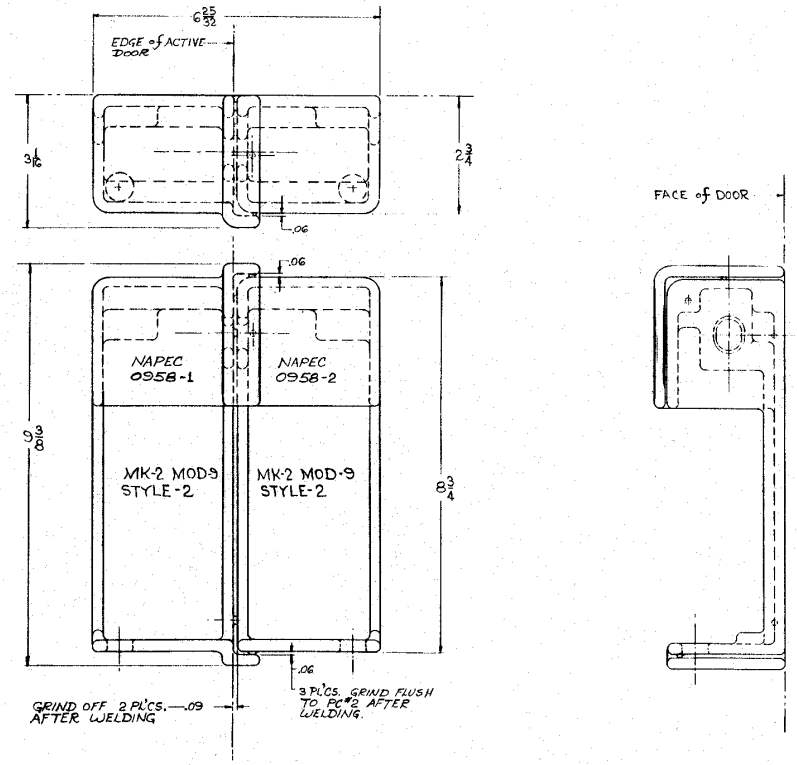

REVISIONS					
ZONE	LTR	DESCRIPTION	DATE	APPROVAL	
	A	SEE NOR 5532335 A	3/4/85		

A	A	A
1	2	3
REVISION STATUS OF SHEETS		

(A)

FIND NO.	QTY REQ	CODE IDENT	PART, DRAWING OR SPEC NO.	NOMENCLATURE/DESCRIPTION	REMARKS
-2	1		CF-3 304-L AMS 5370	CASTING, PASSIVE DOOR	SEE NOTES 1 THRU 8
-1	1			CASTING, ACTIVE DOOR	

PARTS LIST

NEXT ASSY	USED ON
APPLICATION	

SYMBOLS: ITEM; WELD ITEM; ITEM CALLOUT; WELD ITEM CALLOUT

DO NOT SCALE DRAWING
UNLESS OTHERWISE SPECIFIED DIMENSIONS ARE IN INCHES
TOLERANCES: XX DECIMALS ± SEE; XXX DECIMALS ± NOTE; FRACTIONS ± ; ANGLES ± #8
SCALE: FULL

	INITIALS	DATE
EXAMINED		
EXAMINED		
SAFETY		
ENGINEER		
CHECKED		
DESIGNED DRAWN	GJS	4-82
APPROVED	22 ISEP 1982	

NAVAL AMMUNITION PRODUCTION ENGINEERING CENTER CRANE, IN 47522

DEPARTMENT OF THE NAVY NAVAL SEA SYSTEMS COMMAND WASHINGTON, DC 20555

HIGH SECURITY HASP MK-2 MOD 9
HINGED OR SLIDING HORIZONTAL DOOR
LEFT HAND STYLE-2

SIZE	CODE IDENT NO	NAVSEA DWG. NO.	DATE
F	53711	5532335	9-82

SHEET 1 OF 3

NOTICE: THE CONTENTS AND DESIGN DETAIL OF THIS DRAWING WERE DEVELOPED BY THE NAVAL AMMUNITION PRODUCTION ENGINEERING CENTER AND ARE UNITED STATES GOVERNMENT PROPERTY

NAVSEA DRAWING NO. 5532335 SHEET 2 OF 3

(A)

NOTES
1. INTERPRET DRAWING IN ACCORDANCE WITH MIL-STD-100.
2. REMOVE BURRS AND SHARP EDGES

REVISIONS					
ZONE	LTR	DESCRIPTION	DATE	APPROVAL	
	A	SEE NOR 5532335 A			

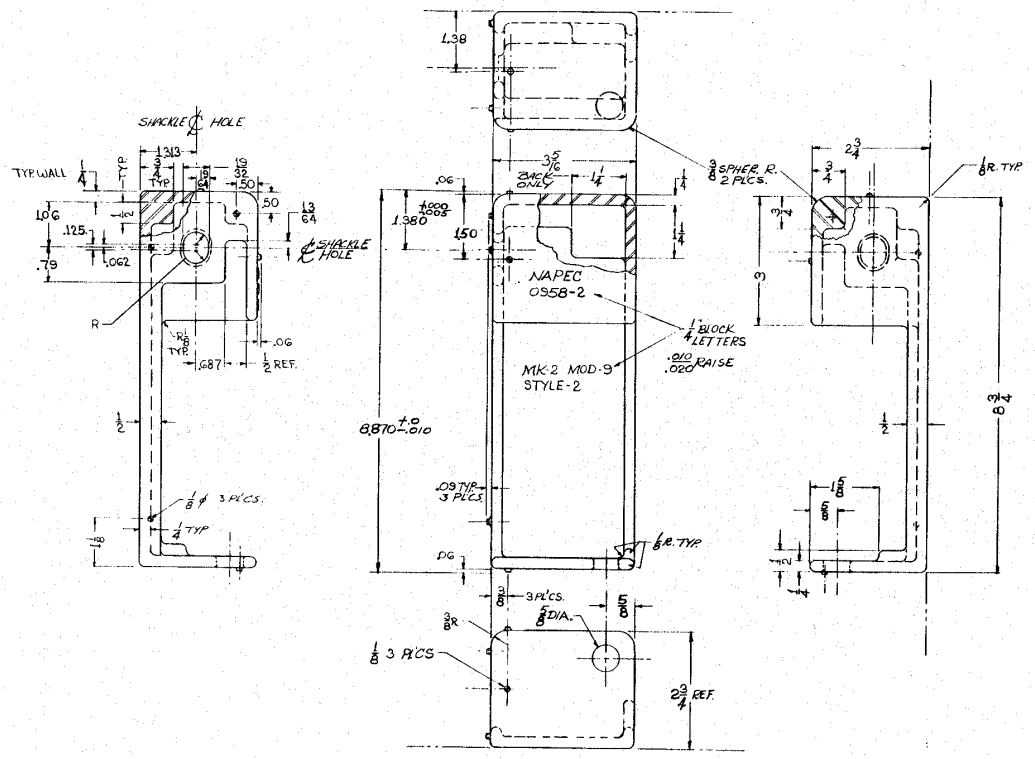

(2) NAPEC #0958
CASTING, PASSIVE DOOR
304 L CF-3
AMS 5370

FIND NO.	QTY REQ	CODE IDENT	PART, DRAWING OR SPEC NO.	NOMENCLATURE/DESCRIPTION	REMARKS
-2	1		304L CF-3	CASTING PASSIVE DOOR	SEE NOTES SHT #1

PARTS LIST

SYMBOLS: ITEM; WELD ITEM; ITEM CALLOUT; WELD ITEM CALLOUT	DO NOT SCALE DRAWING. UNLESS OTHERWISE SPECIFIED, DIMENSIONS ARE IN INCHES. TOLERANCES: XX DECIMALS ± SEE; XXX DECIMALS ± NOTES; FRACTIONS ± SHT #1; ANGLES ±	INITIALS / DATE: EXAMINED, EXAMINED, SAFETY, ENGINEER, CHECKED, DESIGNED GJS 4-82	NAVAL AMMUNITION PRODUCTION ENGINEERING CENTER CRANE, IN 47522	DEPARTMENT OF THE NAVY NAVAL SEA SYSTEMS COMMAND WASHINGTON, DC 20362
NEXT ASSY / USED ON: APPLICATION	SCALE: FULL	APPROVED 22 DEC 1982	HIGH SECURITY HASP MK-2 MOD-9 HINGED OR SLIDING HORIZONTAL DOOR LEFT HAND STYLE 2	
			SIZE F; CODE IDENT NO. 53711; NAVSEA DWG NO. 5532335; SHEET 2 OF 3	DATE 9-82

NOTICE: THE CONTENTS AND DESIGN DETAIL OF THIS DRAWING WERE DEVELOPED BY THE NAVAL AMMUNITION PRODUCTION ENGINEERING CENTER AND ARE UNITED STATES GOVERNMENT PROPERTY

NAVSEA DRAWING NO. 5532335 SHEET 3 OF 3

(A)

NOTES
1. INTERPRET DRAWING IN ACCORDANCE WITH MIL-STD-100.
2. REMOVE BURRS AND SHARP EDGES

REVISIONS					
ZONE	LTR	DESCRIPTION	DATE	APPROVAL	
	A	SEE NOR 5532335 A	3/4/85		

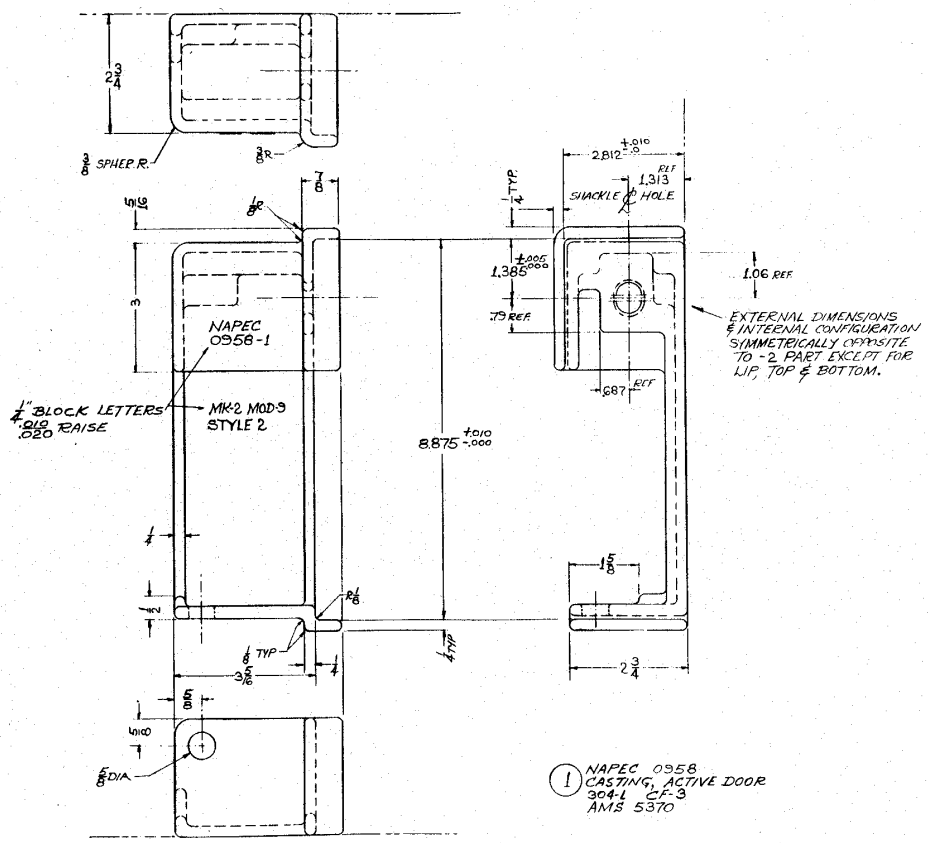

(1) NAPEC 0958
CASTING, ACTIVE DOOR
304-L CF-3
AMS 5370

FIND NO.	QTY REQ	CODE IDENT	PART, DRAWING OR SPEC NO.	NOMENCLATURE/DESCRIPTION	REMARKS
-1	1		304L, CF-3	CASTING, ACTIVE DOOR	SEE NOTES SHT #1

PARTS LIST

NAVAL AMMUNITION PRODUCTION ENGINEERING CENTER CRANE, IN 47522

DEPARTMENT OF THE NAVY NAVAL SEA SYSTEMS COMMAND WASHINGTON, DC 20362

HIGH SECURITY HASP MK-2 MOD-9
HINGED OR SLIDING HORIZONTAL DOOR
LEFT HAND STYLE 2

SIZE	CODE IDENT NO.	NAVSEA DWG NO.	DATE
F	53711	5532335	9-82

SHEET 3 OF 3

DO NOT SCALE DRAWING
UNLESS OTHERWISE SPECIFIED, DIMENSIONS ARE IN INCHES
TOLERANCES
XX DECIMALS .SEE
XXX DECIMALS .NOTE
FRACTIONS .SHT #1
ANGLES
SCALE FULL

	INITIALS	DATE
EXAMINED		
EXAMINED		
SAFETY		
ENGINEER		
CHECKED		
DESIGNED	GJS	4-82
APPROVED	23 SEP 1982	

NEXT ASSY | USED ON
APPLICATION

NOTICE: THE CONTENTS AND DESIGN DETAIL OF THIS DRAWING WERE DEVELOPED BY THE NAVAL AMMUNITION PRODUCTION ENGINEERING CENTER AND ARE OWNED SOLELY GOVERNMENT PROPERTY.

5371I-5532336 SHEET 1 OF 5

REVISIONS						
ZONE	LTR	DESCRIPTION	DATE	APPROVAL		
2 C	A	ADDED REVISION STATUS BLOCK	7-24-83			
4 F		CHANGED DEPICTION				

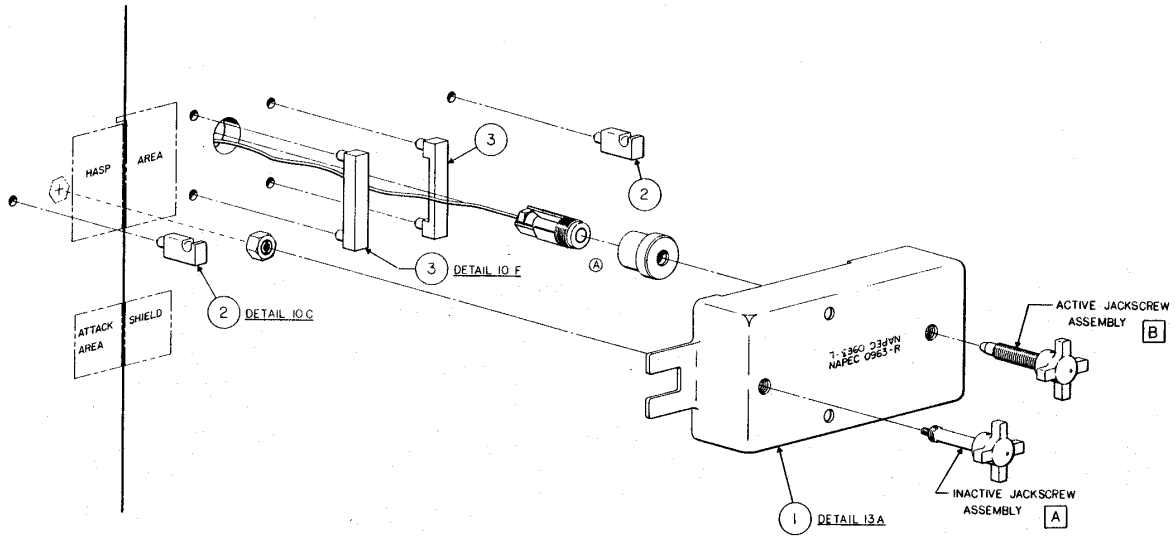

Ⓐ

A	-	A	B	A
A	-	-	A	A
1	2	3	4	5

REVISION STATUS OF SHEETS

ITEM	NOMENCLATURE	ZONE
B	ACTIVE JACKSCREW ASSEMBLY	28 A
A	INACTIVE JACKSCREW ASSEMBLY	20 C

SYMBOLS: TYPE; THIRD ANGLE; VIEW LOCATION; VIEW ORIENTATION

DIMENSIONS AND TOLERANCES ARE IN INCHES. DO NOT SCALE THIS DRAWING. UNLESS OTHERWISE SPECIFIED, DIMENSIONS ARE IN INCHES.

SCALE: NONE

SIZE: F

APPROVED	LB	
DESIGNED		DATE
DRAWN		2-79
TRACED		
CHECKED	ARDH	3-79
ENGINEER	G. J. Gallagher	6/77

AIB SYSTEM FOR HIGH SECURITY HASP

GENERAL ASSEMBLY

DEPARTMENT OF THE NAVY
NAVAL SEA SYSTEMS COMMAND
NAVAL AMMUNITION PRODUCTION ENGINEERING CENTER
CRANE, INDIANA

DRAWING NO. 5371I-5532336

SHEET 1 OF 5

SUPERSEDES

NOTICE: THE INFORMATION AND DESIGN CONTAINED HEREIN, PROPRIETARY TO THE NAVAL ORDNANCE STATION, SHALL NOT BE REPRODUCED OR USED FOR ANY OTHER PURPOSE WITHOUT AUTHORIZATION.

REVISIONS					
ZONE	LTR	DESCRIPTION	DATE	APPROVAL	

5371I-5532336 SHEET 2 OF 5

NOTE:

1. INVESTMENT CASTINGS TO MIL-C-6021 CLASS 4
2. FORMERLY NAPEC DWG. NO. 0963 REV. C
3. FINISH NAS-823 C-12
4. REMELT 304L MATL., ACCEPTABLE NO SLAG OR FOREIGN ALLOYS
5. SPCL. NOTE, LINEAR TOLERANCES (CASTING) PER INVESTMENT CASTING HANDBOOK INVESTMENT CASTING INSTITUTE, SEPT. 1979 (NORMAL LINEAR TOLERANCES)

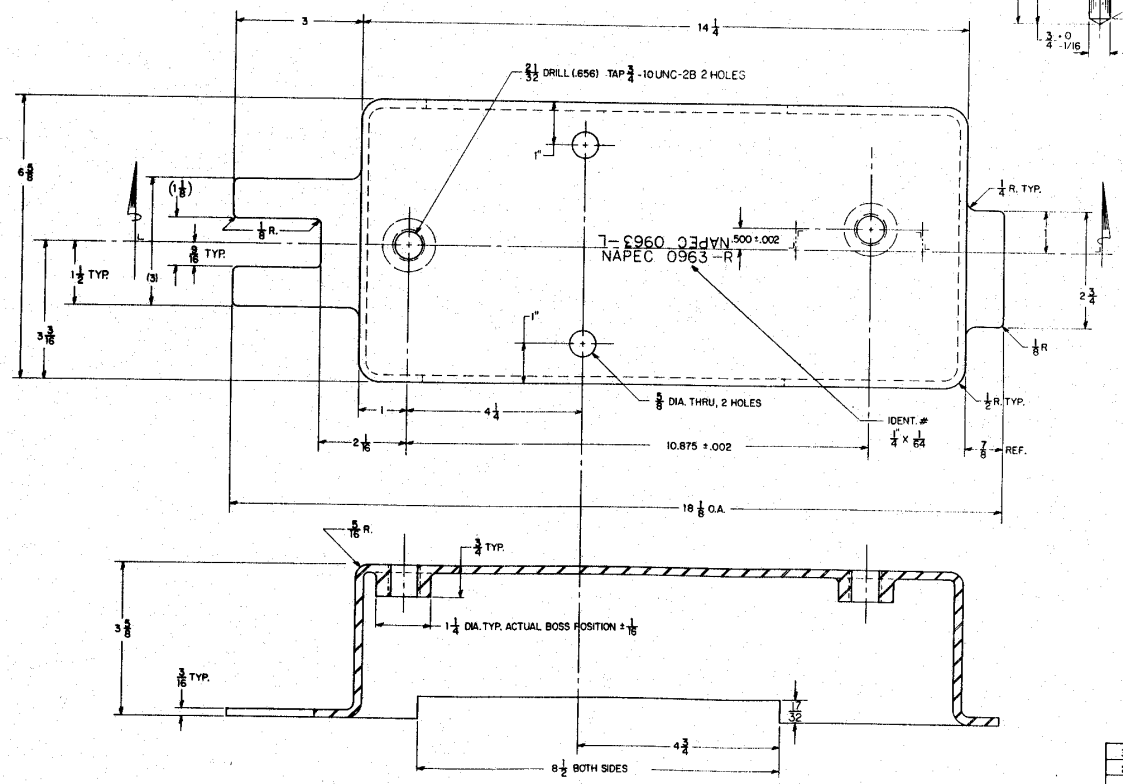

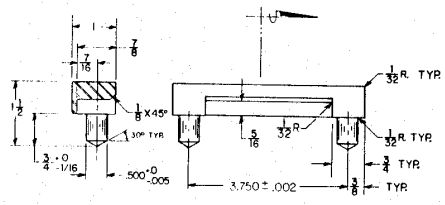

(3) DETAIL 10 F
A.I.B. LUG
MATL. SAME AS #1

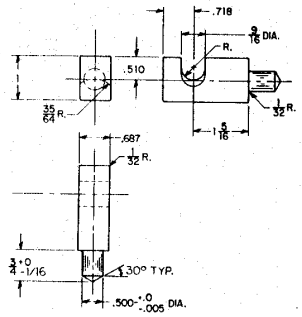

(2) DETAIL 10 C
A.I.B. STAPLE
MATL. SAME AS #1

(1) DETAIL 13A
AIB HOUSING
MATL. STAINLESS TYPE 304L LOW CARBON ASTM A743 (CF-3)
FINISH-GRIT BLAST WITH ALUMINUM OXIDE PER MIL-A-1330 TYPE #1

ITEM	NOMENCLATURE	REQD.	REMARKS
3	AIB LUG	2	304 L SST
2	AIB STAPLE	2	304L SST
1	AIB HOUSING	1	304L SST

APPROVED		AIB SYSTEM FOR HIGH SECURITY HASP
DRAWN	3/79	
CHECKED	3-79	AIB HOUSING DETAILS
SCALE 1/1	SIZE F	

DEPARTMENT OF THE NAVY
NAVAL SEA SYSTEMS COMMAND
NAVAL AMMUNITION PRODUCTION ENGINEERING CENTER
CRANE, INDIANA

DRAWING NO. 5371I-5532336
SHEET 2 OF 5

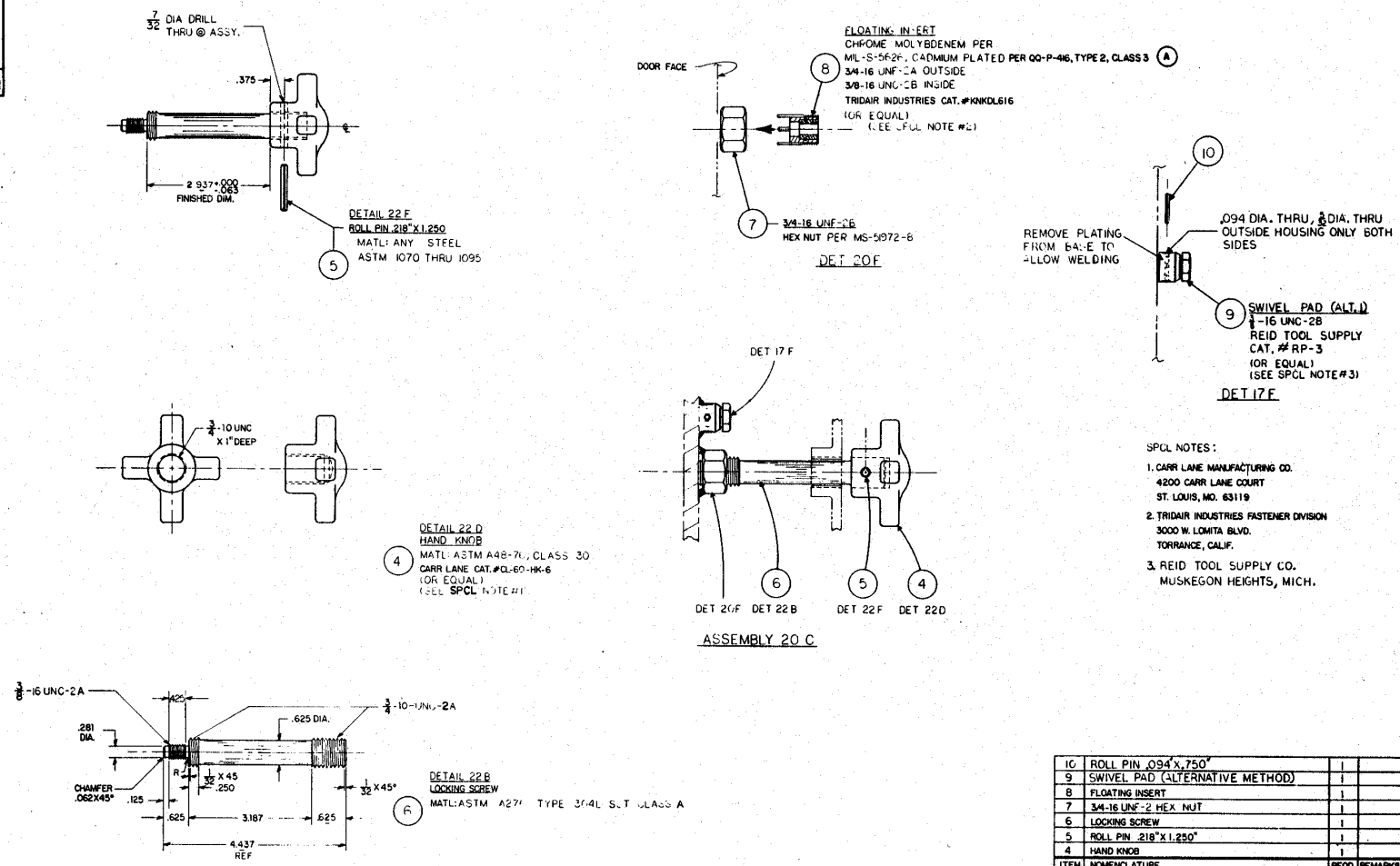

SPCL NOTES:

1. CARR LANE MANUFACTURING CO.
   4200 CARR LANE COURT
   ST. LOUIS, MO. 63119
2. TRIDAIR INDUSTRIES FASTENER DIVISION
   3000 W. LOMITA BLVD.
   TORRANCE, CALIF.
3. REID TOOL SUPPLY CO.
   MUSKEGON HEIGHTS, MICH.

ITEM	NOMENCLATURE	REQD.	REMARKS
10	ROLL PIN .094"X.750"	1	
9	SWIVEL PAD (ALTERNATIVE METHOD)	1	
8	FLOATING INSERT	1	
7	3/4-16 UNF-2 HEX NUT	1	
6	LOCKING SCREW	1	
5	ROLL PIN .218"X 1.250"	1	
4	HAND KNOB	1	

REVISIONS			
A	SEE NOR 5532336 A		

AIB SYSTEM FOR HIGH SECURITY HASP

INACTIVE JACKSCREW SYSTEM DETAILS

DEPARTMENT OF THE NAVY
NAVAL SEA SYSTEMS COMMAND
NAVAL AMMUNITION PRODUCTION ENGINEERING CENTER
CRANE, INDIANA

DRAWING NO. 5371-5532336
SHEET 3 OF 5

SCALE 1/1

REVISIONS						
ZONE	LTR	DESCRIPTION	DATE	APPROVAL		
29C	A	CHANGED DEPICTION				
28C	B	CHANGED BUSHING				

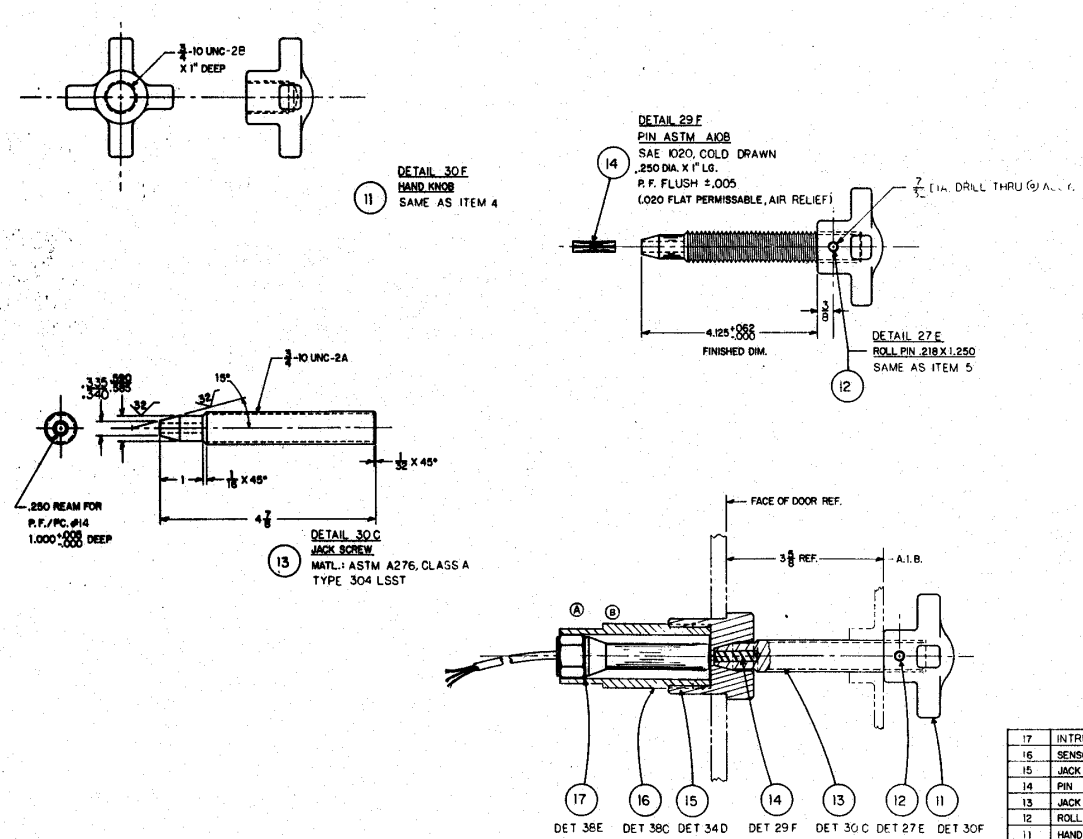

ASSEMBLY 28A

ITEM	NOMENCLATURE	REQD.	REMARKS
17	INTRUSION SENSOR	1	SEE SHEET 5
16	SENSOR BUSHING	1	SEE SHEET 5
15	JACK SCREW BUSHING	1	SEE SHEET 5
14	PIN	1	C.R.S.
13	JACK SCREW	1	304 LSST
12	ROLL PIN .218 X 1.250	1	STD.
11	HAND KNOB	1	

AIB SYSTEM FOR HIGH SECURITY HASP

ACTIVE JACKSCREW SYSTEM DETAILS

DEPARTMENT OF THE NAVY
NAVAL SEA SYSTEMS COMMAND
NAVAL AMMUNITION PRODUCTION ENGINEERING CENTER
CRANE, INDIANA

DRAWING NO. 5371I-5532336
SHEET 4 OF 5

SCALE 1/1 SIZE F

DRAWN FROH 3-79
G.J. SANADE 6/77

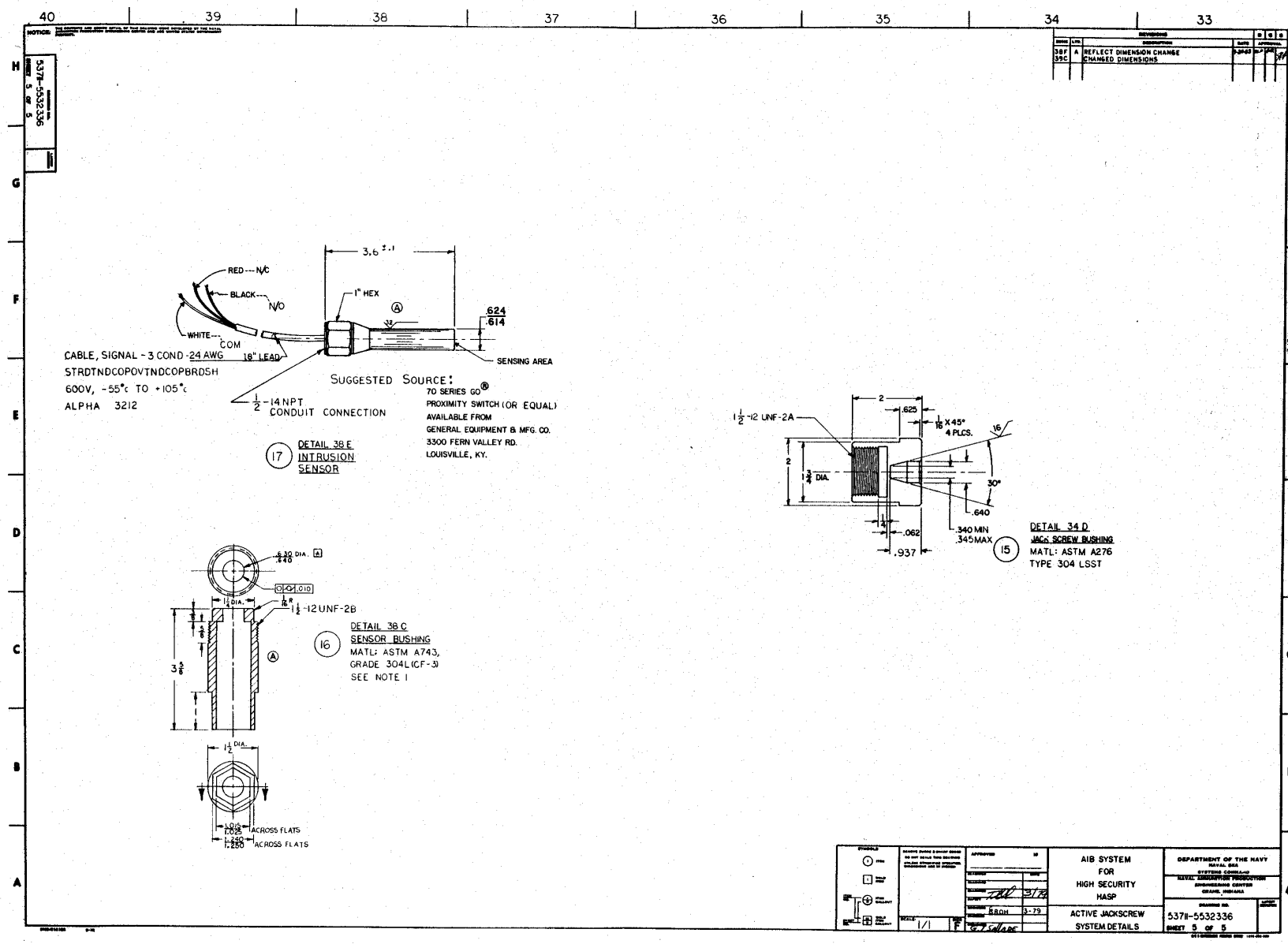

REVISIONS
38F A REFLECT DIMENSION CHANGE
39C CHANGED DIMENSIONS
5371-5532336
SHEET 5 OF 5
RED --- N/C
BLACK --- N/O
WHITE --- COM
18" LEAD
3.6 ±.1
1" HEX
.624
.614
SENSING AREA
CABLE, SIGNAL - 3 COND - 24 AWG
STRDTNDCOPOVTNDCOPBRDSH
600V, -55°c TO +105°c
ALPHA 3212
1/2 - 14 NPT
CONDUIT CONNECTION
SUGGESTED SOURCE:
70 SERIES GO®
PROXIMITY SWITCH (OR EQUAL)
AVAILABLE FROM
GENERAL EQUIPMENT & MFG. CO.
3300 FERN VALLEY RD.
LOUISVILLE, KY.
17 DETAIL 38 E
INTRUSION
SENSOR
1 1/2 -12 UNF-2A
2
.625
1/16 X 45°
4 PLCS.
1 3/4 DIA.
30°
.640
.062
.937
.340 MIN
.345 MAX
15 DETAIL 34 D
JACK SCREW BUSHING
MATL: ASTM A276
TYPE 304 LSST
.630 DIA.
.640
.010
1 1/4 DIA.
1/16 R
1 1/2 -12 UNF-2B
3 5/8
16 DETAIL 38 C
SENSOR BUSHING
MATL: ASTM A743,
GRADE 304L (CF-3)
SEE NOTE 1
1 1/2 DIA.
1.015
1.025
ACROSS FLATS
1.240
1.250
ACROSS FLATS
AIB SYSTEM
FOR
HIGH SECURITY
HASP
ACTIVE JACKSCREW
SYSTEM DETAILS
DEPARTMENT OF THE NAVY
NAVAL SEA
SYSTEMS COMMAND
NAVAL AMMUNITION PRODUCTION
ENGINEERING CENTER
CRANE, INDIANA
DRAWING NO.
5371-5532336
SHEET 5 OF 5
SCALE 1/1
F
G.T. SALADE
3-79

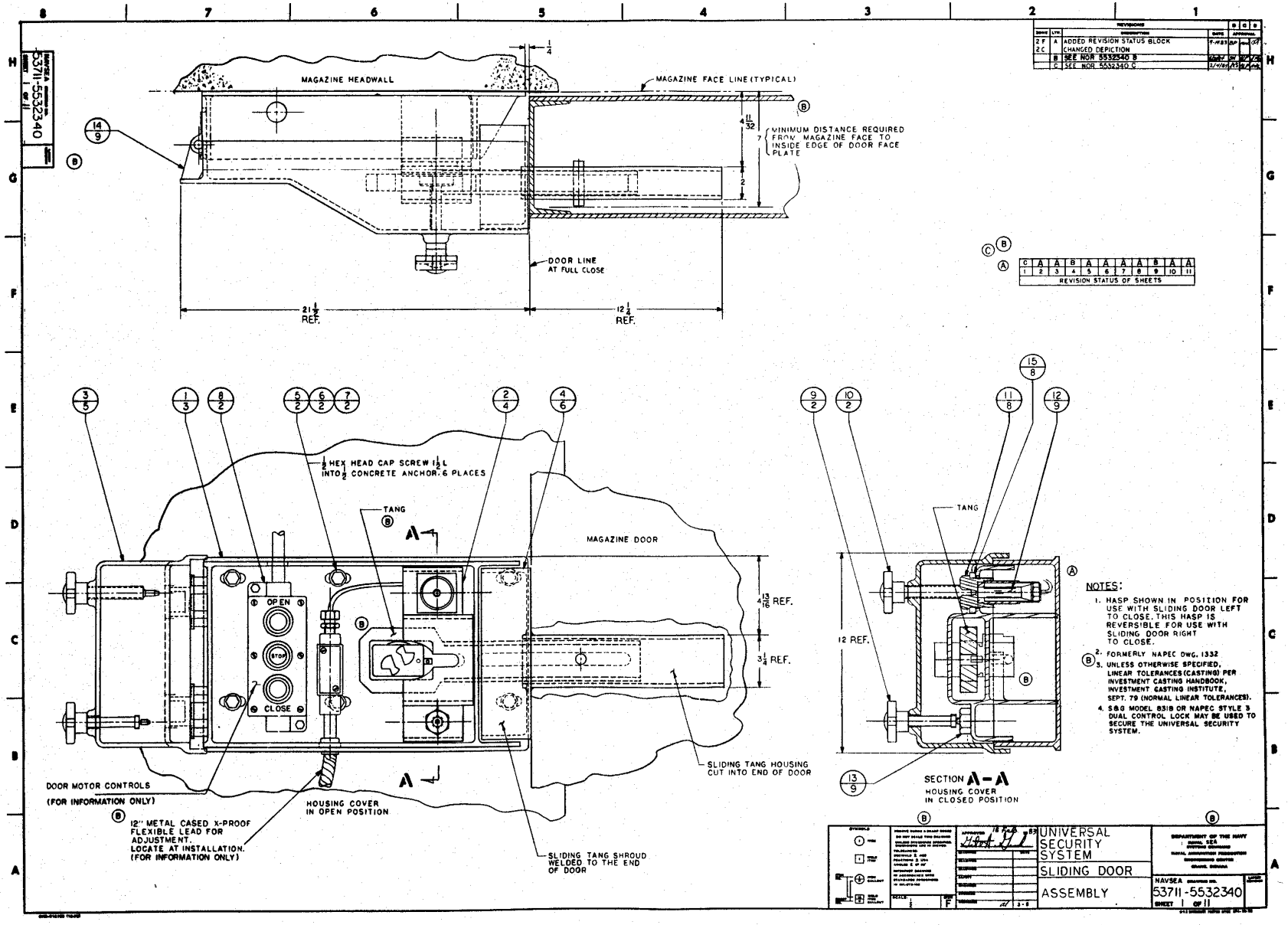
MAGAZINE HEADWALL
MAGAZINE FACE LINE (TYPICAL)
MINIMUM DISTANCE REQUIRED FROM MAGAZINE FACE TO INSIDE EDGE OF DOOR FACE PLATE
DOOR LINE AT FULL CLOSE
21 1/2 REF.
12 1/4 REF.
1/2 HEX HEAD CAP SCREW 1 1/2 L INTO 1/2 CONCRETE ANCHOR. 6 PLACES
TANG
MAGAZINE DOOR
OPEN
STOP
CLOSE
4 13/16 REF.
3 1/4 REF.
DOOR MOTOR CONTROLS
(FOR INFORMATION ONLY)
12" METAL CASED X-PROOF FLEXIBLE LEAD FOR ADJUSTMENT. LOCATE AT INSTALLATION. (FOR INFORMATION ONLY)
HOUSING COVER IN OPEN POSITION
SLIDING TANG SHROUD WELDED TO THE END OF DOOR
SLIDING TANG HOUSING CUT INTO END OF DOOR
12 REF.
SECTION A-A
HOUSING COVER IN CLOSED POSITION
NOTES:
1. HASP SHOWN IN POSITION FOR USE WITH SLIDING DOOR LEFT TO CLOSE. THIS HASP IS REVERSIBLE FOR USE WITH SLIDING DOOR RIGHT TO CLOSE.
2. FORMERLY NAPEC DWG. 1332
3. UNLESS OTHERWISE SPECIFIED, LINEAR TOLERANCES (CASTING) PER INVESTMENT CASTING HANDBOOK, INVESTMENT CASTING INSTITUTE, SEPT. 79 (NORMAL LINEAR TOLERANCES).
4. S&G MODEL 831B OR NAPEC STYLE 3 DUAL CONTROL LOCK MAY BE USED TO SECURE THE UNIVERSAL SECURITY SYSTEM.
REVISION STATUS OF SHEETS
UNIVERSAL SECURITY SYSTEM
SLIDING DOOR
ASSEMBLY
NAVSEA 53711-5532340
SHEET 1 OF 11

REVISIONS					
ZONE	LTR.	DESCRIPTION	DATE	APPROVAL	
	A	SEE NOR 5532340 A			

ITEM	PART/MFD NO	NOMENCLATURE/DESRIPTION	QTY	NOTES	REMARKS
15		BUSHING SHIM	1		SEE SHEET 8
14		HINGE ASSEMBLY	2		SEE SHEET 9
13		HEX NUT BUSHING ASSEMBLY (INACTIVE JACK SCREW)	1		SEE DETAIL 9
12		INTRUSION SENSOR ASSEMBLY	1		SEE SHEET 9
11		ACTIVE JACK SCREW BUSHING	1		SEE DETAIL 8
10	5532348-2	ACTIVE JACK SCREW ASSEMBLY	1		
9	5532348-1	INACTIVE JACK SCREW ASSEMBLY	1		
8		PUSH BUTTON CONTROL NEMA 4 13	1		INFO. ONLY
7		1/2-13 UNC-3 EXPANSION ANCHOR	6		INFO. ONLY
6		1/2 FLAT WASHER	6		INFO. ONLY
5		1/2-13 UNC-3 HEX HD CAP SCR	6		INFO. ONLY
4		TANG AND SHROUD ASSEMBLY	1		SEE SHEET 6
3		MAIN HOUSING COVER	1		SEE DETAIL 5
2		LOCKING AND SENSOR HOUSING	1		SEE DETAIL 4
1		MAIN HOUSING BASE	1		SEE DETAIL 1

SYMBOLS: ITEM / FIELD ITEM / FIELD ASSEMBLY / FIELD ASSEMBLY

APPROVED 18 FEB 83

UNIVERSAL SECURITY SYSTEM

SLIDING DOOR

PARTS LIST

SCALE 1 SIZE F

2-80

DEPARTMENT OF THE NAVY
NAVAL SEA SYSTEMS COMMAND
NAVAL AVIATION PROGRAMS ENGINEERING CENTER
CHARLES, INDIANA

NAVSEA DRAWING NO. 53711-5532340
SHEET 2 OF 11

NAVSEA DRAWING NO. 53711-5532340
SHEET 2 OF 11

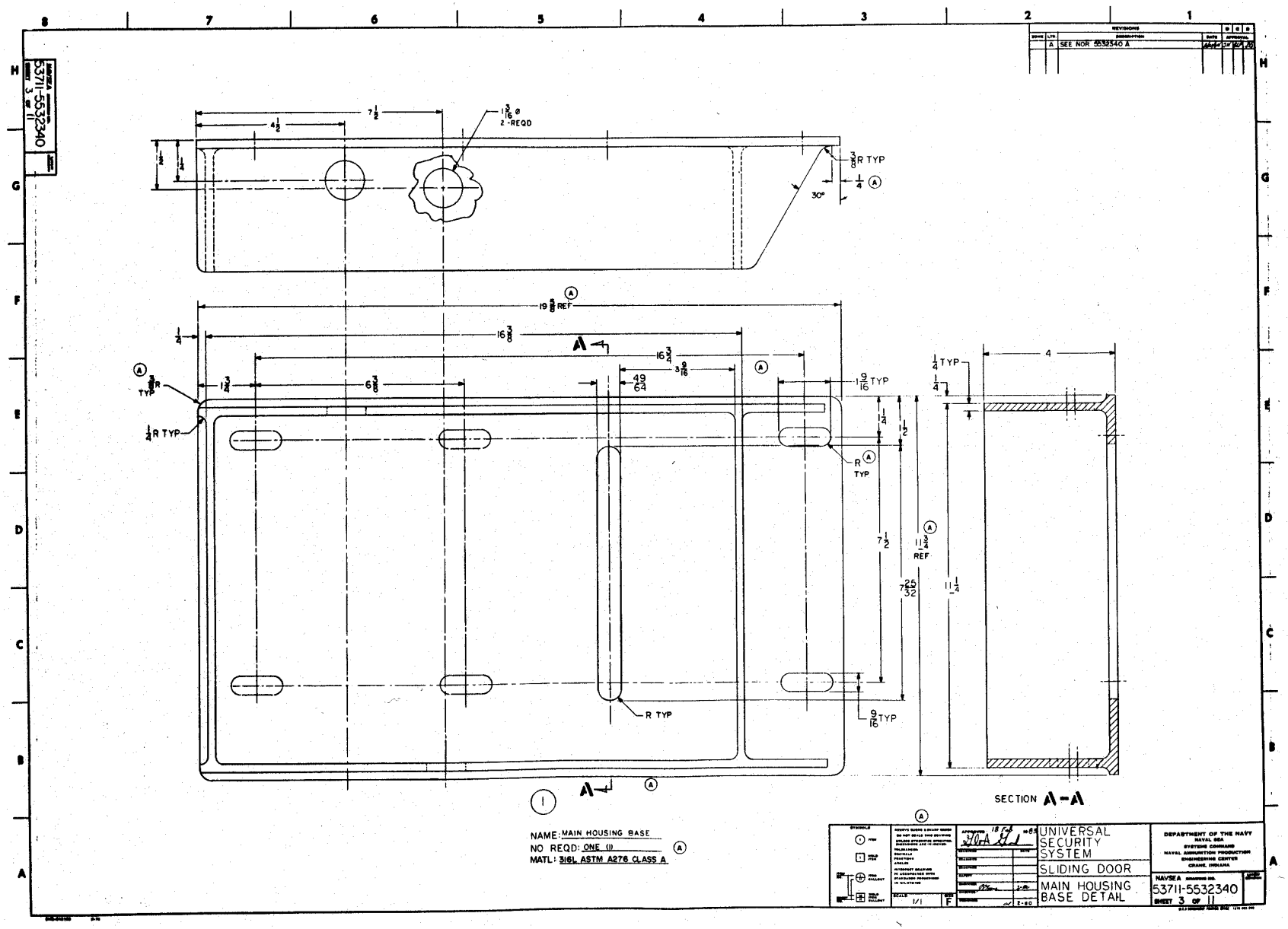

NAVSEA DRAWING NO. 53711-5532340
SHEET 3 OF 11
REVISIONS
A SEE NOR 5532340 A
7 1/2
4 1/2
1 3/16 Ø 2-REQD
3/8 R TYP
1/4 (A)
30°
19 5/8 REF (A)
16 3/8
16 3/4
3 9/16
49/64
1 3/4
6 3/8
1/4 R TYP
3/8 R TYP (A)
1 9/16 TYP
R (A) TYP
R TYP
9/16 TYP
7 1/2
7 25/32
11 3/4 REF (A)
11 1/4
1/4 TYP
1/4
4
SECTION A-A
NAME: MAIN HOUSING BASE
NO REQD: ONE (1)
MATL: 316L ASTM A276 CLASS A
UNIVERSAL SECURITY SYSTEM
SLIDING DOOR
MAIN HOUSING BASE DETAIL
DEPARTMENT OF THE NAVY
NAVAL SEA SYSTEMS COMMAND
NAVAL AMMUNITION PRODUCTION ENGINEERING CENTER
CRANE, INDIANA
NAVSEA DRAWING NO. 53711-5532340
SHEET 3 OF 11
SCALE 1/1
SIZE F

NAVSEA 53711-5532340 SHEET 4 OF 11

REVISIONS				
A	SEE NOR 5532340 A			
B	SEE NOR 5532340C			

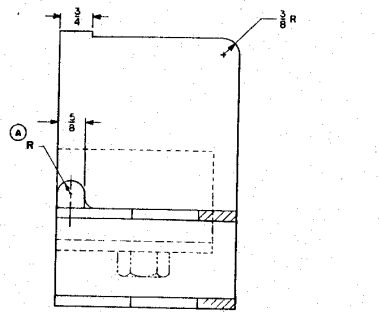

SECT A-A

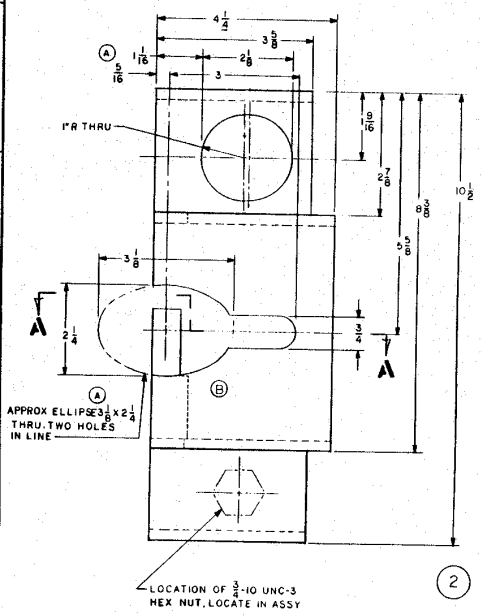

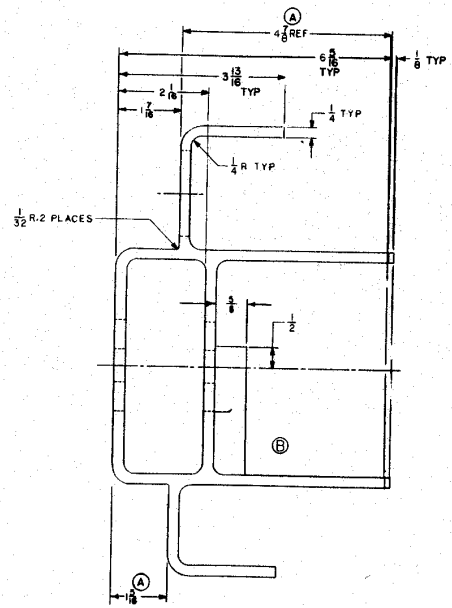

2

NAME: LOCKING AND SENSOR HOUSING
NO REQD: ONE (1)
MATL: 316L ASTM A276 CLASS A

UNIVERSAL SECURITY SYSTEM	DEPARTMENT OF THE NAVY NAVAL SEA SYSTEMS COMMAND NAVAL AUDIOVISUAL PRODUCTION ENGINEERING CENTER DRAWING DIVISION	
SLIDING DOOR		
LOCKING AND SENSOR HOUSING DETAIL	NAVSEA DRAWING NO. 53711-5532340 SHEET 4 OF 11	

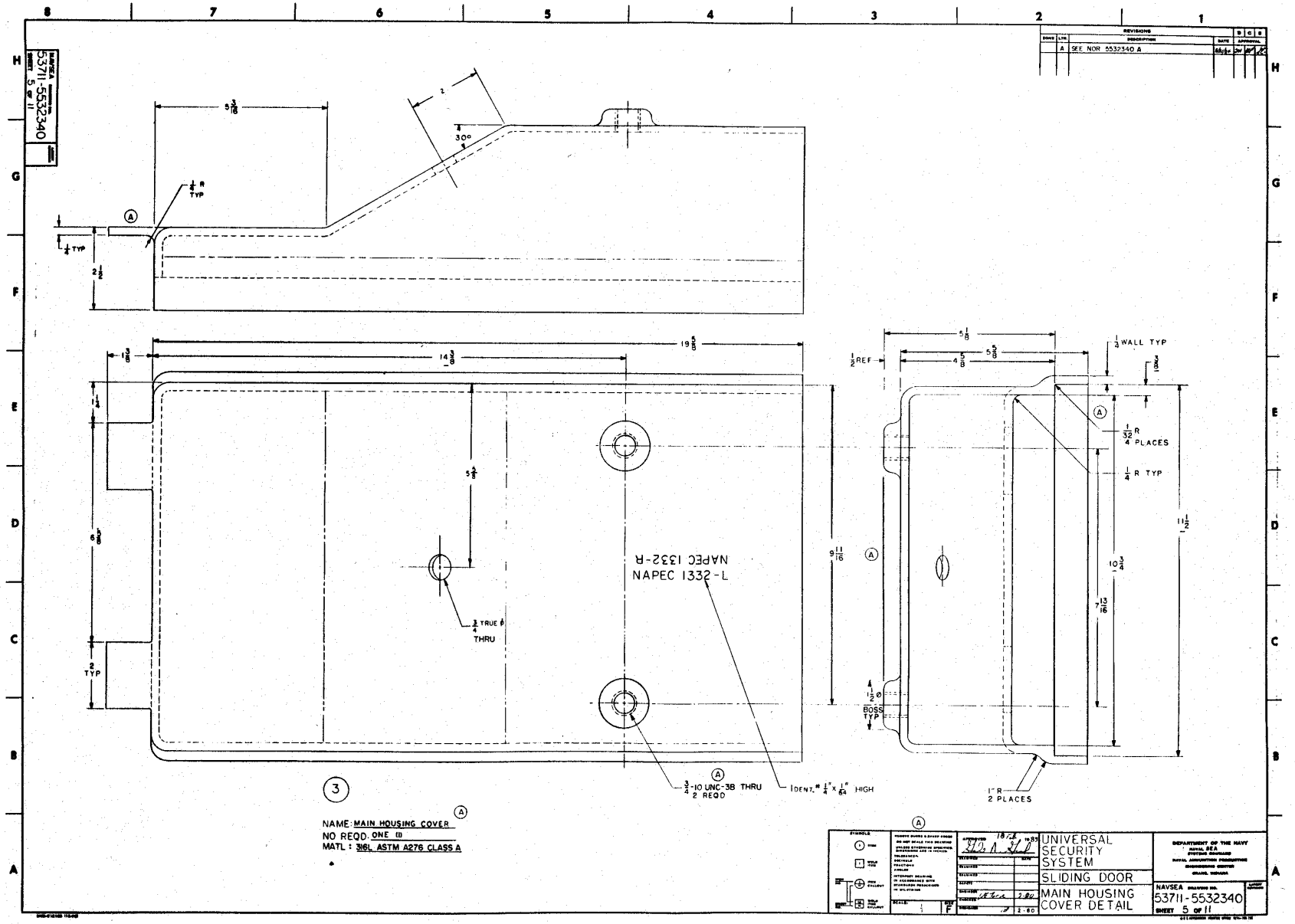

NAVSEA 53711-5532340 SHEET 5 of 11
REVISIONS
A SEE NOR 5532340 A
5 3/16
2
30°
1/4 R TYP
1/4 TYP
2 1/2
19 5/8
14 3/8
1 3/8
1 1/4
6 5/8
5 5/8
2 TYP
3/4 TRUE ø THRU
NAPEC 1332-R
NAPEC 1332-L
9 11/16
3/4-10 UNC-3B THRU 2 REQD
IDENT. # 1/4" x 1/64" HIGH
5 1/8
5 5/8
4 5/8
1/2 REF
1/4 WALL TYP
3/8
1/32 R 4 PLACES
1/4 R TYP
11 1/2
10 3/4
7 13/16
1 1/2 ø BOSS TYP
1" R 2 PLACES
3
NAME: MAIN HOUSING COVER
NO REQD. ONE (1)
MATL: 316L ASTM A276 CLASS A
UNIVERSAL SECURITY SYSTEM
SLIDING DOOR
MAIN HOUSING COVER DETAIL
DEPARTMENT OF THE NAVY
NAVAL SEA SYSTEMS COMMAND
NAVAL AMMUNITION PRODUCTION ENGINEERING CENTER
CHARLES, INDIANA
NAVSEA DRAWING NO. 53711-5532340
SHEET 5 OF 11

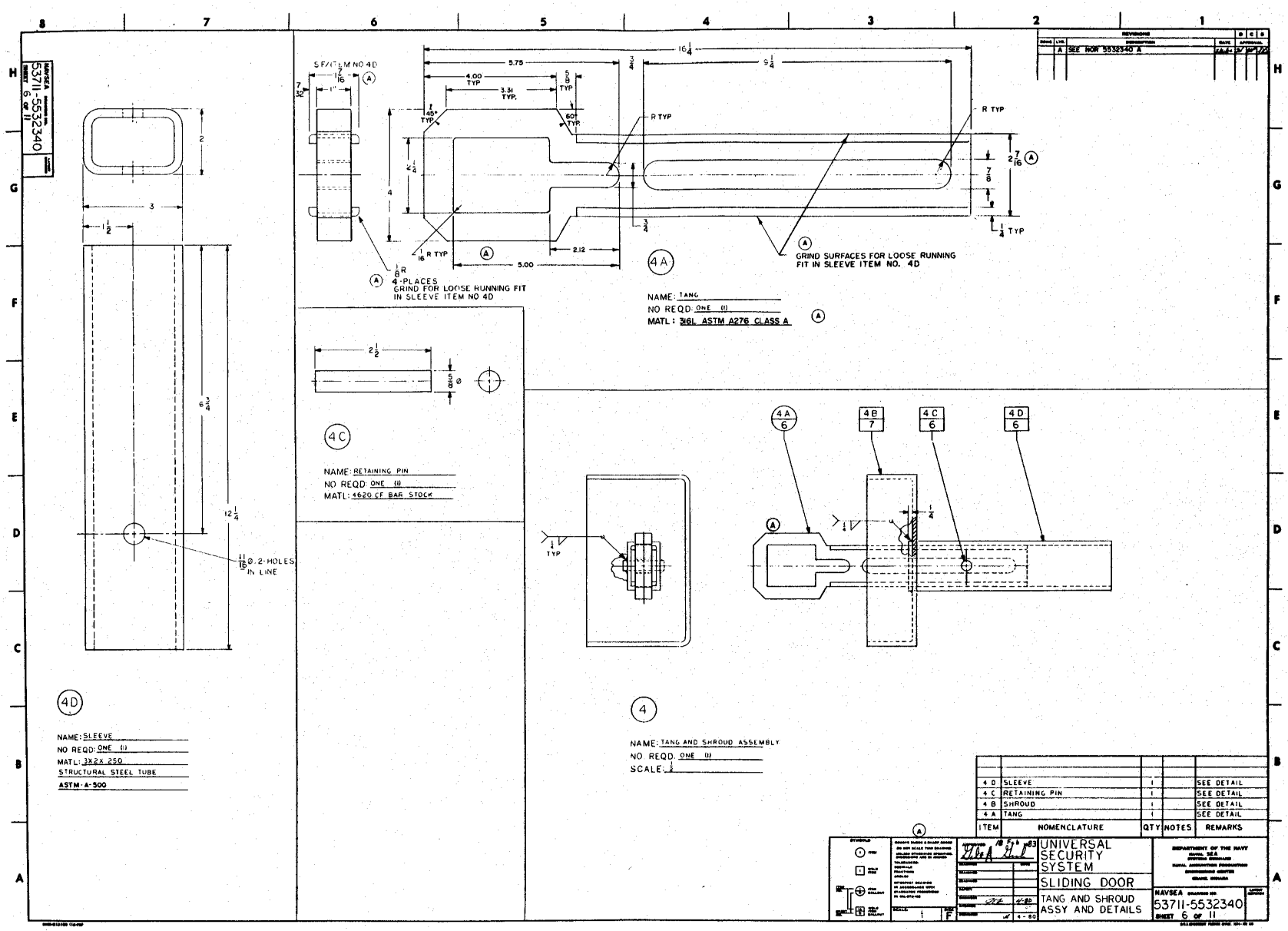

NAVSEA 53711-5532340 SHEET 6 OF 11
REVISIONS
A SEE NOR 5532340 A
SF/ITEM NO 4D
4-PLACES GRIND FOR LOOSE RUNNING FIT IN SLEEVE ITEM NO 4D
GRIND SURFACES FOR LOOSE RUNNING FIT IN SLEEVE ITEM NO. 4D
4A
NAME: TANG
NO REQD: ONE (1)
MATL: 316L ASTM A276 CLASS A
4C
NAME: RETAINING PIN
NO REQD: ONE (1)
MATL: 4620 CF BAR STOCK
11/16 Ø. 2-HOLES IN LINE
4D
NAME: SLEEVE
NO REQD: ONE (1)
MATL: 3X2X 250
STRUCTURAL STEEL TUBE
ASTM-A-500
4
NAME: TANG AND SHROUD ASSEMBLY
NO REQD. ONE (1)
SCALE: 1/2
4 D SLEEVE 1 SEE DETAIL
4 C RETAINING PIN 1 SEE DETAIL
4 B SHROUD 1 SEE DETAIL
4 A TANG 1 SEE DETAIL
ITEM NOMENCLATURE QTY NOTES REMARKS
UNIVERSAL SECURITY SYSTEM
SLIDING DOOR
TANG AND SHROUD ASSY AND DETAILS
DEPARTMENT OF THE NAVY
NAVSEA 53711-5532340 SHEET 6 OF 11

REVISIONS					
ZONE	LTR.	DESCRIPTION	DATE	APPROVAL	
	A	SEE NOR 5532340 A			

NAVSEA 53711-5532340 SHEET 7 OF 11

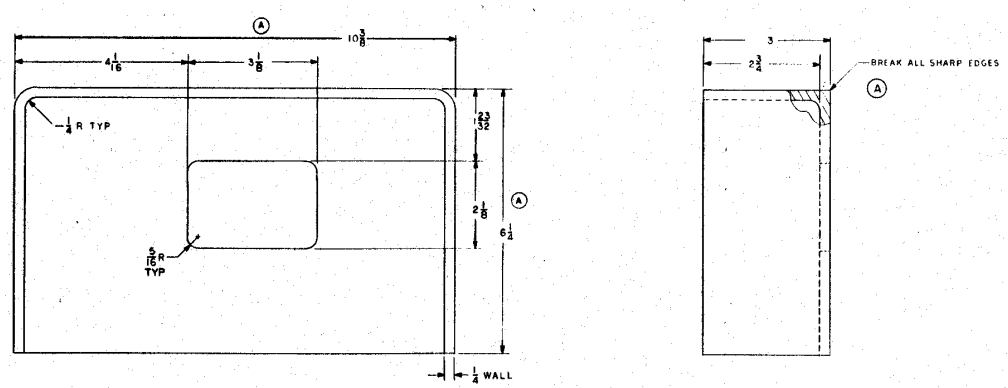

4B

NAME: TANG SHROUD
NO REQD: ONE (1)
MATL: 316L ASTM A276 CLASS A

UNIVERSAL SECURITY SYSTEM	DEPARTMENT OF THE NAVY NAVAL SEA SYSTEMS COMMAND NAVAL AMMUNITION PRODUCTION ENGINEERING CENTER GRAND, INDIANA	
SLIDING DOOR	NAVSEA DRAWING NO. 53711-5532340	
TANG SHROUD DETAIL	SHEET 7 OF 11	

SCALE 1 F

NAVSEA 5532340 SHEET 8 OF 11

NOTES
1. INTERPRET DRAWING IN ACCORDANCE WITH DOD STD 100.
2. REMOVE BURRS AND SHARP EDGES

ZONE	LTR	REVISIONS DESCRIPTION	DATE	APPROVAL
	A	REPLACES 5532340 NO REVISION WITH CHANGE SEE NOR 5532340 A		

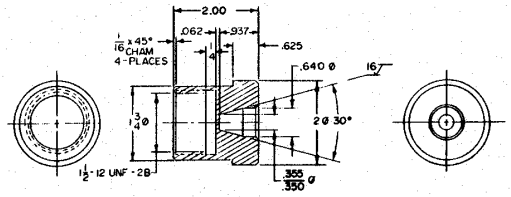

11

NAME: ACTIVE JACKSCREW BUSHING
NO REQD: ONE (1)
MATL: 316L ASTM A276 CLASS A

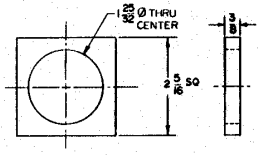

15

NAME: BUSHING SHIM (ACTIVE JACKSCREW)
NO REQD: ONE (1)
MATL: 316L ASTM A276 CLASS A

FIND NO.	QTY REQ	CODE IDENT	PART, DRAWING OR SPEC NO.	NOMENCLATURE/DESCRIPTION	REMARKS

PARTS LIST

NEXT ASSY	USED ON
APPLICATION	

SYMBOLS: ITEM; WELD ITEM; ITEM CALLOUT; WELD ITEM CALLOUT

DO NOT SCALE DRAWING
UNLESS OTHERWISE SPECIFIED, DIMENSIONS ARE IN INCHES.
TOLERANCES:
XX DECIMALS ± .01
XXX DECIMALS ± .005
FRACTIONS ± 1/64
ANGLES ± 1°
SCALE: 1/1

	INITIALS	DATE
EXAMINED		
EXAMINED		
SAFETY		
ENGINEER		
CHECKED		
DESIGNED	JW	6/2/64
APPROVED	/	19

NAVAL AMMUNITION PRODUCTION ENGINEERING CENTER CRANE, IN 47522

DEPARTMENT OF THE NAVY NAVAL SEA SYSTEMS COMMAND WASHINGTON, DC 20362

UNIVERSAL SECURITY SYSTEM

SIZE	CODE IDENT NO.	NAVSEA	DWG NO.
F	53711		5532340

SHEET 8 OF 11

REVISIONS				
ZONE	LTR	DESCRIPTION	DATE	APPROVAL
7C	A	CHANGED DIMENSIONS		
8C		CHANGED DIMENSIONS		
5C		REFLECT DIMENSION CHANGES		
8C		REFLECT DIMENSION CHANGES		
	B	SEE NOR 5532340 A		

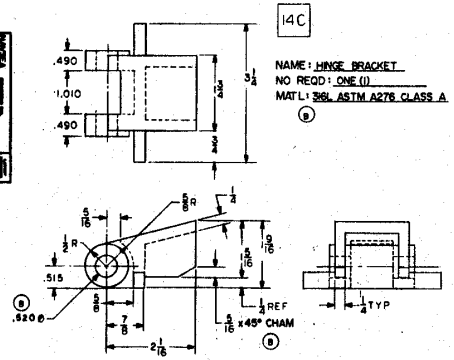

NAME: HINGE BRACKET
NO REQD: ONE (1)
MATL: 316L ASTM A276 CLASS A (B)

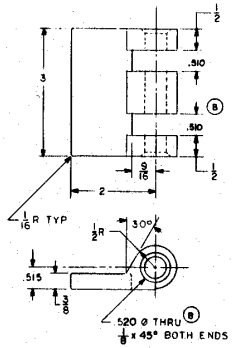

NAME: HINGE PAD
NO REQD: ONE (1)
MATL: 316L ASTM A276 CLASS A (B)

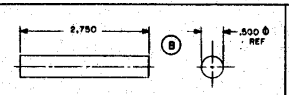

14B

NAME: HINGE PIN
NO REQD: ONE (1)
MATL: 316L ASTM A276 CLASS A (B)

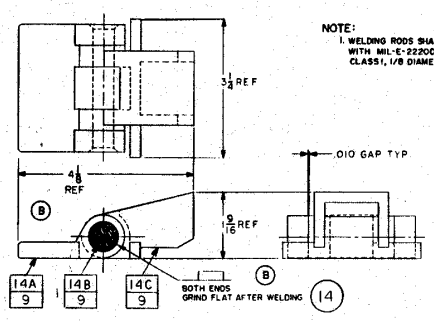

NOTE:
1. WELDING RODS SHALL BE IN ACCORDANCE WITH MIL-E-22200/2, TYPE MIL-310-16, CLASS 1, 1/8 DIAMETER.

ITEM	NOMENCLATURE	QTY	MATL	REMARKS
14C	HINGE BRACKET	1		SEE DETAIL
14B	HINGE PIN	1		
14A	HINGE PAD	1		

NAME: HINGE ASSEMBLY
NO REQD: ONE (1)

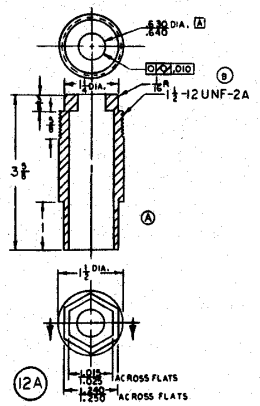

NAME: SENSOR BUSHING
NO REQD: ONE (1)
MATL: 316L ASTM A276 CLASS A (B)

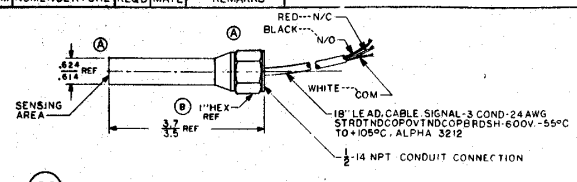

NAME: SENSOR
NO REQD: ONE (1)

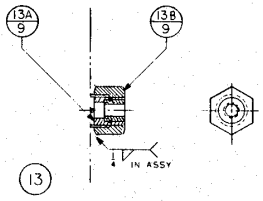

NAME: HEX NUT BUSHING ASSY
(INACTIVE JACK SCREW)
NO REQD: ONE (1)

NOTE:
1. FLOATING INSERT SST (B)
3/4-16UNF-2A OUTSIDE
3/8-16UNC-2B INSIDE
TRIDAIR INDUSTRIES
CAT NO KNKDL616

ITEM	NOMENCLATURE	QTY	NOTES	REMARKS
13B	3/4-16 UNF-2B HEX NUT	1		304 SST
13A	FLOATING INSERT	1	1	

NOTE:
1. MODEL 713729 (B)
SUGGESTED SOURCE:
70 SERIES GO ®
PROXIMITY SWITCH
AVAILABLE FROM
GENERAL EQUIPMENT & MFG CO
3300 FERN VALLEY RD
LOUISVILLE, KY
2. SUGGESTED SOURCE:
TENNESSEE INVESTMENT CASTING CO.
RT 2 BLOUNTVILLE HIGHWAY
BRISTOL, TENN. 37620
3. ITEM 12B SHALL BE INSTALLED FLUSH TO 1/16 BELOW SURFACE A AS SHOWN USING ADHESIVE, MIL-A-46050, TYPE I, CLASS 2. ADHESIVE SHALL BE APPLIED 360 DEG MIN

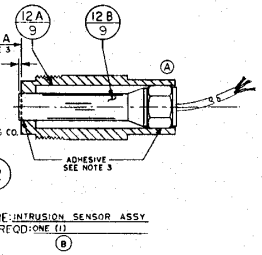

NAME: INTRUSION SENSOR ASSY
NO REQD: ONE (1)

ITEM	NOMENCLATURE	QTY	NOTES	REMARKS
12B	SENSOR	1	1	
12A	SENSOR BUSHING	1	2	

UNIVERSAL SECURITY SYSTEM
SLIDING DOOR
INTRUSION SENSOR ASSY, HEX NUT BUSHING ASSY, HINGE ASSY AND DETAILS

DEPARTMENT OF THE NAVY
NAVAL SEA SYSTEMS COMMAND
NAVAL AMMUNITION PRODUCTION ENGINEERING CENTER
GRAND, OKLAHOMA

NAVSEA DRAWING NO. 53711-5532340
SHEET 9 OF 11

SCALE: 1 | SIZE F | 4-80

NOTES
1. INTERPRET DRAWING IN ACCORDANCE WITH DOD-STD-100.
2. REMOVE BURRS AND SHARP EDGES
3. WELDING RODS SHALL BE IN ACCORDANCE WITH MIL-E-22200/2, TYPE MIL-310-16, CLASS I, 1/8 DIAMETER.

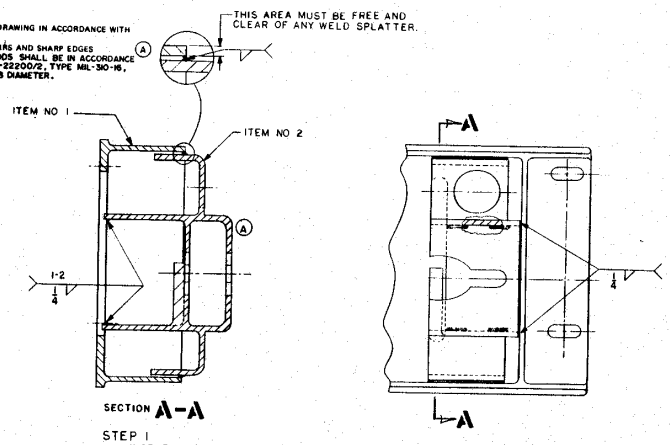

SECTION A-A

STEP 1
INSERT LOCKING AND SENSOR HOUSING, ITEM NO 2 INTO MAIN HOUSING BASE, ITEM NO 1 AND WELD IN PLACE AS SHOWN.

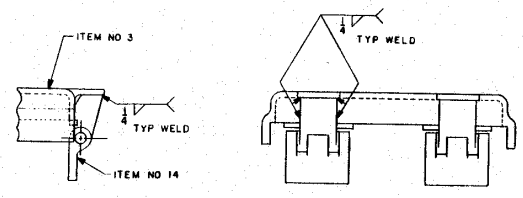

STEP 2
POSITION TWO (2) HINGE ASSEMBLIES, ITEM NO 14, AGAINST TAIL PIECES OF MAIN HOUSING COVER, ITEM NO 3, WELD IN PLACE AS SHOWN.

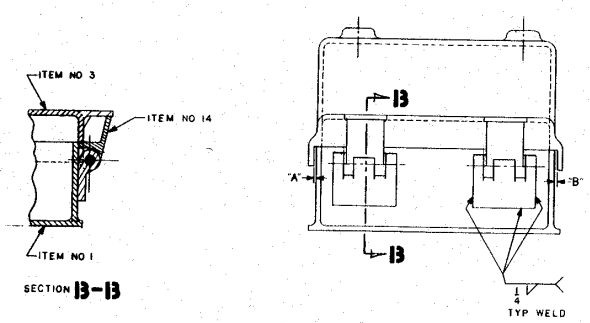

SECTION B-B

STEP 3
POSITION MAIN HOUSING ITEM NO 3 WITH HINGE ASSEMBLIES ATTACHED ONTO MAIN HOUSING BASE, ITEM NO 1, SO THAT THE INSIDE OF HOUSING COVER WALL AND OUTSIDE OF BASE WALL ARE ALIGNED IN THE AREA OF HINGES. COVER TO BE POSITIONED SO THAT THE DISTANCE "A" AND "B" SHOWN ARE RELATIVELY EQUAL. WELD HINGE ASSEMBLY, ITEM NO 14, TO MAIN HOUSING BASE, ITEM NO 1, AS SHOWN.

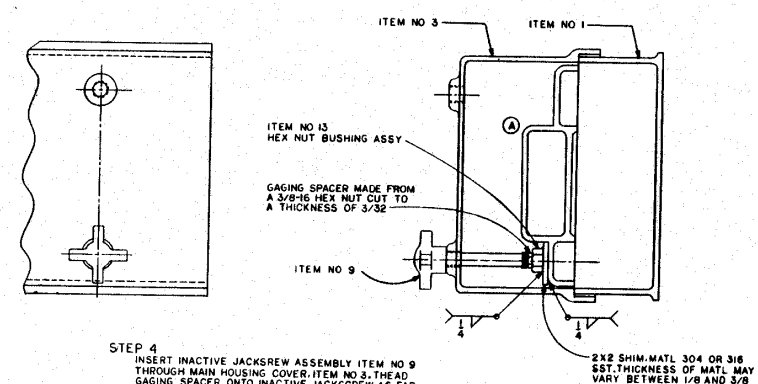

STEP 4
INSERT INACTIVE JACKSREW ASSEMBLY ITEM NO 9 THROUGH MAIN HOUSING COVER, ITEM NO 3. THEAD GAGING SPACER ONTO INACTIVE JACKSCREW AS FAR AS POSSIBLE AND THREAD INACTIVE JACKSCREW NUT, ITEM NO 13, AGAINST GAGING SPACER.

DETERMINE THICKNESS OF SHIM MATERIAL REQUIRED BETWEEN LOCKING AND SENSOR HOUSING, ITEM NO 2, AND INACTIVE JACKSCREW NUT. TACK WELD SHIM AND NUT TO MAINTAIN POSITION. OPEN MAIN HOUSING COVER AND FINISH WELDS AS SHOWN. REMOVE SPACER AND SAVE FOR NEXT LOCKING SYSTEM.

ZONE	LTR	REVISIONS DESCRIPTION	DATE	APPROVAL
	A	SEE NOR 5532340 A		

FIND NO.	QTY REQ	CODE IDENT	PART, DRAWING OR SPEC NO.	NOMENCLATURE/DESCRIPTION	REMARKS

PARTS LIST

NAVAL AMMUNITION PRODUCTION ENGINEERING CENTER CRANE, IN 47522

DEPARTMENT OF THE NAVY NAVAL SEA SYSTEMS COMMAND WASHINGTON, DC 20362

UNIVERSAL SECURITY SYSTEM
SLIDING DOOR
HOUSING, TANG AND SHROUD ASSY

SIZE	CODE IDENT NO.	NAVSEA	DWG NO.
F	53711		5532340

SHEET 10 OF 11

NEXT ASSY | USED ON
APPLICATION

DO NOT SCALE DRAWING
UNLESS OTHERWISE SPECIFIED DIMENSIONS ARE IN INCHES
TOLERANCES:
XX DECIMALS ±
XXX DECIMALS ±
FRACTIONS ±
ANGLES ±
SCALE:

APPROVED 9-80

NAVSEA 5532340

REVISIONS					
ZONE	LTR	DESCRIPTION	DATE	APPROVAL	
	A	SEE NOR 5532340 A			

NAVSEA 53711-5532340 SHEET 11 OF 11

NOTES
1. INTERPRET DRAWING IN ACCORDANCE WITH DOD STD 100.
2. REMOVE BURRS AND SHARP EDGES
3. WELDING RODS SHALL BE IN ACCORDANCE WITH MIL-E-22200/2, TYPE MIL-310-16, CLASS I, 1/8 DIAMETER. (A)

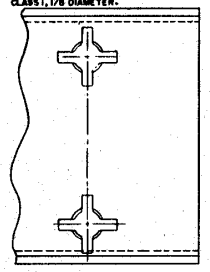

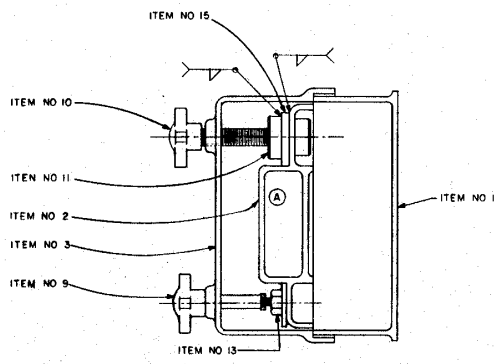

STEP 5
THREAD ACTIVE JACKSCREW ASSEMBLY, ITEM NO 10 THROUGH MAIN HOUSING COVER ITEM NO 3. LOCATE BUSHING SHIM, ITEM NO 15, AND SENSOR BUSHING, ITEM NO 11, SO THAT ACTIVE JACKSCREW WILL ALIGN THEM CORRECTLY IN THE HOLE CAST IN LOCKING AND SENSOR HOUSING, ITEM NO 2.

LOCK THE MAIN HOUSING COVER SECURELY AGAINST THE MAIN HOUSING BASE, ITEM NO 1, BY THREADING INACTIVE JACKSCREW, ITEM NO 9, INTO INACTIVE JACKSCREW NUT, ITEM NO 13, UNTIL HAND-TIGHT. TACKWELD ITEMS 11 AND 15 TO ITEM NO 2 IF ALIGNMENT OF ITEM ON 11 AND 15 ARE SATISFACTORY. OPEN COVER AND FINISH WELDS.

STEP 6
FABRICATE SLEEVE ITEM 4D INCLUDING CUTTING TO LENGTH AND DRILLING RETAINING PIN HOLE ACCORDING TO SHEET 6.

STEP 7
FABRICATE RETAINING PIN ACCORDING TO SHEET 6.

INSERT SLEEVE ITEM 4D THROUGH HOLE IN SHROUD ITEM 4B AND WELD ACCORDING TO SHEET 6.

STEP 8
INSERT TANG ITEM 4A INTO SLEEVE ITEM 4D AS SHOWN ON SHEET 6. GRIND TANG AS REQUIRED TO ALLOW LOOSE RUNNING FIT. (A)

STEP 9
INSERT RETAINING PIN ITEM 4C THROUGH HOLE IN SLEEVE ITEM 4D AND THROUGH SLOT IN TANG ITEM 4A AS SHOWN ON SHEET 6.
WELD PIN TO SLEEVE AT BOTH ENDS.

FIND NO.	QTY REQ	CODE IDENT	PART, DRAWING OR SPEC NO.	NOMENCLATURE/DESCRIPTION	REMARKS

PARTS LIST

NEXT ASSY	USED ON
APPLICATION	

SYMBOLS: (1) ITEM; (2) WELD ITEM; ITEM NO (1) ITEM CALLOUT; SHEET NO (2) WELD ITEM CALLOUT

DO NOT SCALE DRAWING — UNLESS OTHERWISE SPECIFIED, DIMENSIONS ARE IN INCHES
TOLERANCES: XX DECIMALS ±; XXX DECIMALS ±; FRACTIONS ±; ANGLES ±
SCALE

	INITIALS	DATE
EXAMINED		
EXAMINED		
SAFETY		
ENGINEER		
CHECKED		
DRAWN	al	9-80

APPROVED 18 Feb 1983 HGA Y.L

NAVAL AMMUNITION PRODUCTION ENGINEERING CENTER CRANE, IN 47522
DEPARTMENT OF THE NAVY NAVAL SEA SYSTEMS COMMAND WASHINGTON, DC 20362

UNIVERSAL SECURITY SYSTEM
SLIDING DOOR
HOUSING, TANG AND SHROUD ASSY

SIZE F | CODE IDENT NO. 53711 | NAVSEA | DWG NO. 5532340 | SHEET 11 OF 11

NOTES
1. INTERPRET DRAWING IN ACCORDANCE WITH DOD-STD-100.
2. REMOVE BURRS AND SHARP EDGES
3. USE WELDING ROD 310-16 3/32 DIA.

REVISIONS						
ZONE	LTR	DESCRIPTION	DATE	APPROVAL		
	A	SEE NOR 5532345 A	5/16/85	[illegible]		

A	A	A
1	2	3
REVISION STATUS OF SHEETS		

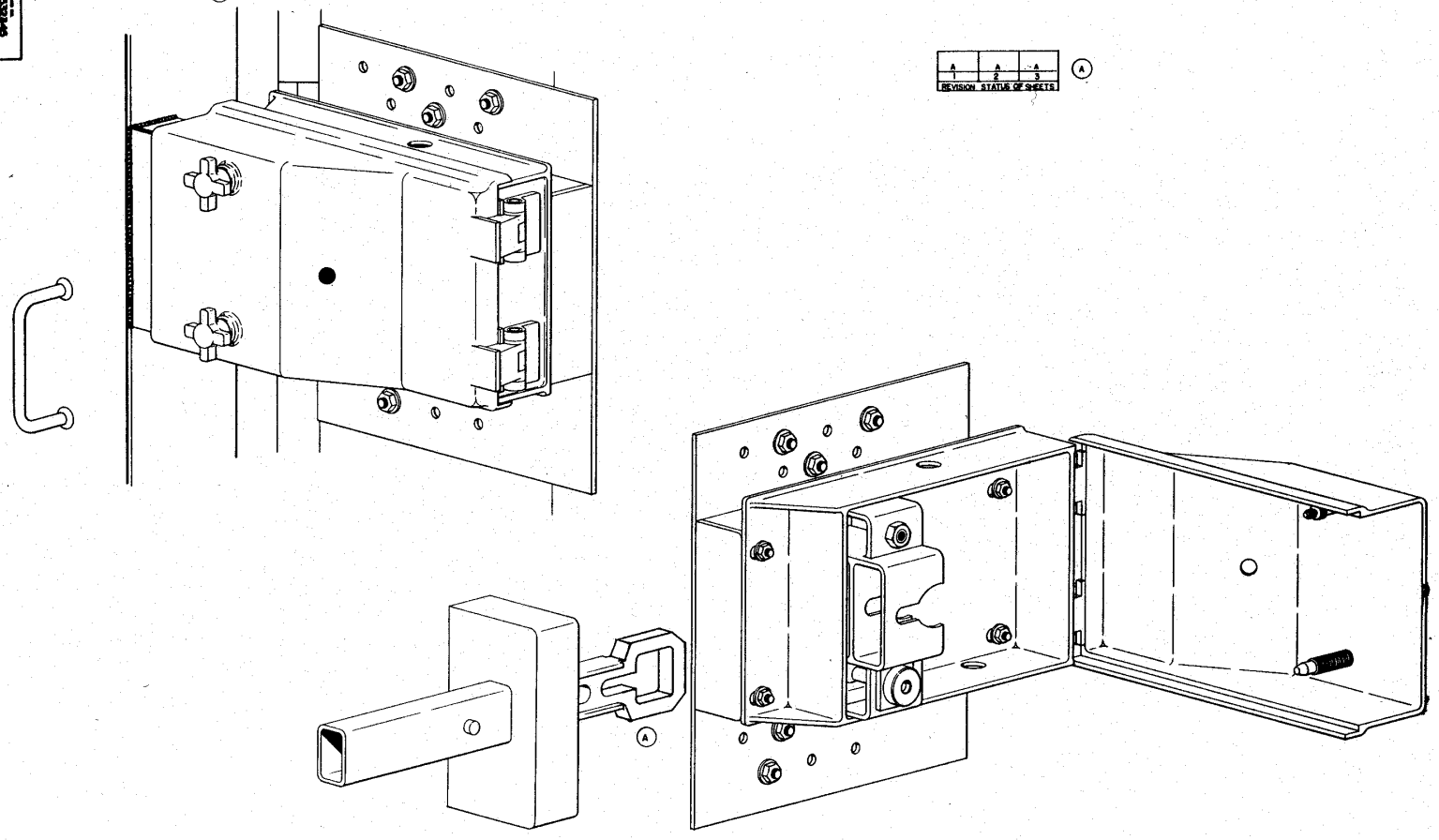

FIND NO.	QTY REQ	CODE IDENT	PART, DRAWING OR SPEC NO.	NOMENCLATURE/DESCRIPTION	REMARKS

PARTS LIST

NEXT ASSY	USED ON
APPLICATION	

SYMBOLS: ITEM; WELD ITEM; ITEM CALLOUT; WELD ITEM CALLOUT

DO NOT SCALE DRAWING
UNLESS OTHERWISE SPECIFIED DIMENSIONS ARE IN INCHES.
TOLERANCES:
XX DECIMALS ±
XXX DECIMALS ±
FRACTIONS ±
ANGLES ±
SCALE:

	INITIALS	DATE
EXAMINED		
EXAMINED		
SAFETY		
ENGINEER		
CHECKED		
DESIGNER		
APPROVED	[illegible]	26 1981

NAVAL AMMUNITION PRODUCTION ENGINEERING CENTER CRANE, IN 47522

DEPARTMENT OF THE NAVY NAVAL SEA SYSTEMS COMMAND WASHINGTON, DC 20362

UNIVERSAL SECURITY SYSTEM
Sliding Door Installation Procedures

OVAL ARCH MAGAZINE

SIZE F | CODE IDENT NO. 63711 | NAVSEA DWG NO. 5532345

SHEET 1 OF 3

REVISIONS					
ZONE	LTR	DESCRIPTION	DATE	D	C	B APPROVAL
	A	SEE NOR 5532345 A				

NOTES:
1. INTERPRET DRAWING IN ACCORDANCE WITH DOD-STD-100.
2. REMOVE BURRS AND SHARP EDGES
3. USE WELDING ROD SO-16, 3/32 DIA.

(A)

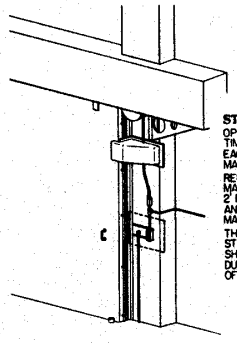

STEP 1
OPEN AND CLOSE MAGAZINE DOOR SEVERAL TIMES NOTING THE POSITION OF THE DOOR EACH TIME IT STOPS IN THE CLOSED POSITION. MARK THIS POSITION ON THE HEADWALL.

REMOVE ANY OBSTRUCTIONS FROM THE MAGAZINE HEADWALL IN AREA APPROXIMATELY 2' RIGHT OF THE DOOR (IN CLOSED POSITION) AND AT A HEIGHT 3' TO 5' ABOVE THE MAGAZINE APRON.

THE DOOR EMERGENCY STOP ACTUATOR STRIP LOCATED ON THE END OF THE DOOR SHOULD BE REMOVED TO PREVENT DAMAGE DURING THE CUTTING AND WELDING PHASES OF THE INSTALLATION.

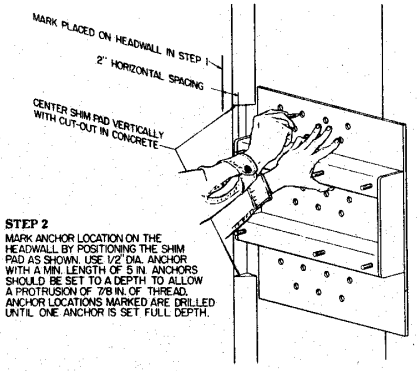

STEP 2
MARK ANCHOR LOCATION ON THE HEADWALL BY POSITIONING THE SHIM PAD AS SHOWN. USE 1/2" DIA. ANCHOR WITH A MIN. LENGTH OF 5 IN. ANCHORS SHOULD BE SET TO A DEPTH TO ALLOW A PROTRUSION OF 7/8 IN. OF THREAD. ANCHOR LOCATIONS MARKED ARE DRILLED UNTIL ONE ANCHOR IS SET FULL DEPTH.

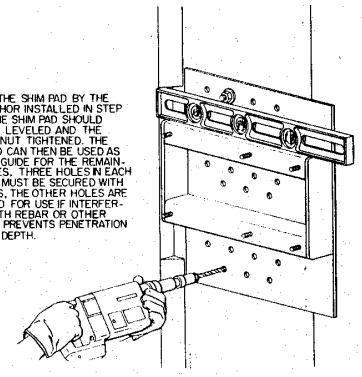

STEP 3
ATTACH THE SHIM PAD BY THE ONE ANCHOR INSTALLED IN STEP NO. 2. THE SHIM PAD SHOULD THEN BE LEVELED AND THE ANCHOR NUT TIGHTENED. THE SHIM PAD CAN THEN BE USED AS A DRILL GUIDE FOR THE REMAINING HOLES. THREE HOLES IN EACH SECTION MUST BE SECURED WITH ANCHORS, THE OTHER HOLES ARE PROVIDED FOR USE IF INTERFERENCE WITH REBAR OR OTHER OBJECTS PREVENTS PENETRATION TO FULL DEPTH.

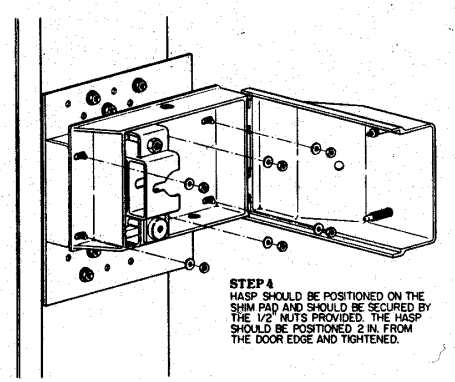

STEP 4
HASP SHOULD BE POSITIONED ON THE SHIM PAD AND SHOULD BE SECURED BY THE 1/2" NUTS PROVIDED. THE HASP SHOULD BE POSITIONED 2 IN. FROM THE DOOR EDGE AND TIGHTENED.

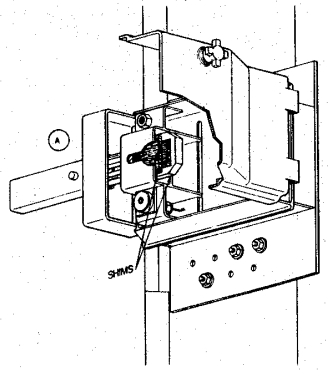

STEP 5
THE TANG AND SHROUD ASSEMBLY SHOULD THEN BE INSERTED INTO THE LOCK HOUSING AND THE TANG SHIMMED IN THE CENTER OF THE LOCK HOUSING.

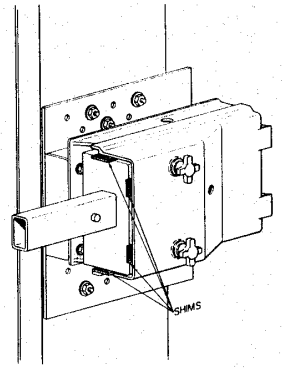

STEP 6
CLOSE COVER AND FASTEN SECURELY USING TWO JACKSCREWS.
INSERT WOODEN SHIM BETWEEN THE SHROUD AND THE COVER AS SHOWN TO CENTER THE SHROUD ASSEMBLY.

FIND NO.	QTY REQ	CODE IDENT	PART, DRAWING OR SPEC NO.	NOMENCLATURE/DESCRIPTION	REMARKS

PARTS LIST

NEXT ASSY	USED ON
APPLICATION	

SYMBOLS: ITEM; WELD ITEM; ITEM CALLOUT; WELD ITEM CALLOUT

DO NOT SCALE DRAWING
UNLESS OTHERWISE SPECIFIED, DIMENSIONS ARE IN INCHES
TOLERANCES
XX DECIMALS ±
XXX DECIMALS ±
FRACTIONS ±
ANGLES ±
SCALE

	INITIALS	DATE
EXAMINED		
EXAMINED		
SAFETY		
ENGINEER		
CHECKED		
DESIGNED		
DRAWN		

APPROVED 8 18/87 18B/

NAVAL AMMUNITION PRODUCTION ENGINEERING CENTER CRANE, IN 47522

DEPARTMENT OF THE NAVY NAVAL SEA SYSTEMS COMMAND WASHINGTON, DC 20362

UNIVERSAL SECURITY SYSTEM OVAL ARCH MAGAZINE
Sliding Door Installation Procedures

SIZE F | CODE IDENT NO. 53711 | NAVSEA DWG NO. 5532345

SHEET 2 OF 3

NAVSEA 5532345
SHEET 3 OF 3

NOTES
1. INTERPRET DRAWING IN ACCORDANCE WITH DOD-STD-100.
2. REMOVE BURRS AND SHARP EDGES
3. USE WELDING ROD 310-16, 3/32 DIA. (A)

ZONE	LTR	REVISIONS DESCRIPTION	DATE	D	C	S APPROVAL
	A	SEE NOR 5532345 A	1/6/85			

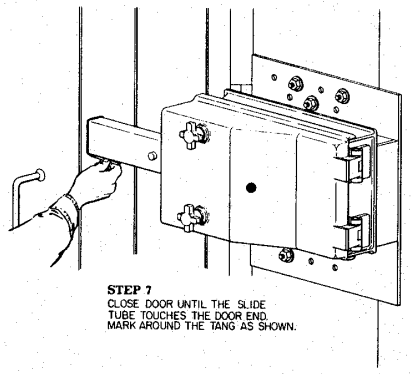

STEP 7
CLOSE DOOR UNTIL THE SLIDE TUBE TOUCHES THE DOOR END. MARK AROUND THE TANG AS SHOWN.

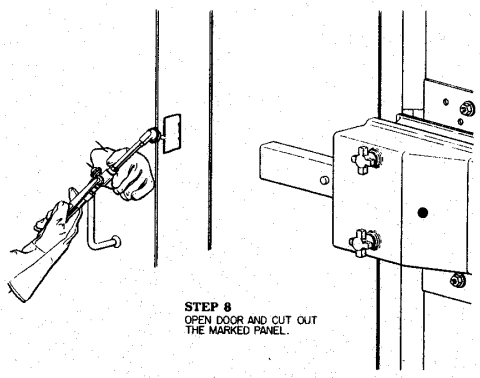

STEP 8
OPEN DOOR AND CUT OUT THE MARKED PANEL.

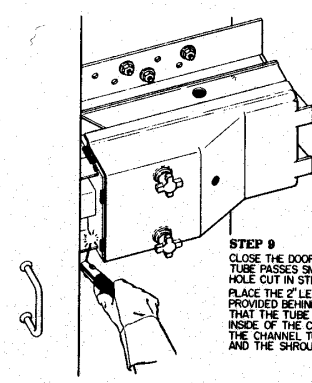

STEP 9
CLOSE THE DOOR UNTIL THE PROTRUDING TUBE PASSES SMOOTHLY THROUGH THE HOLE CUT IN STEP 8.
PLACE THE 2" LENGTH OF 10" CHANNEL PROVIDED BEHIND THE TANG TUBE SO THAT THE TUBE IS CENTERED IN THE INSIDE OF THE CHANNEL. TACK WELD THE CHANNEL TO BOTH THE DOOR END AND THE SHROUD.

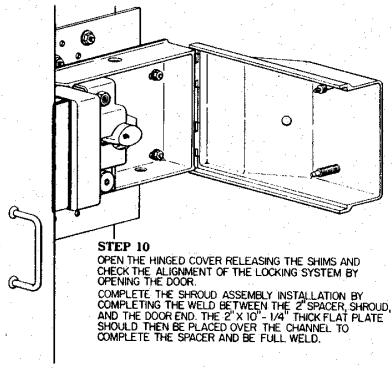

STEP 10
OPEN THE HINGED COVER RELEASING THE SHIMS AND CHECK THE ALIGNMENT OF THE LOCKING SYSTEM BY OPENING THE DOOR.
COMPLETE THE SHROUD ASSEMBLY INSTALLATION BY COMPLETING THE WELD BETWEEN THE 2" SPACER, SHROUD, AND THE DOOR END. THE 2" X 10" - 1/4" THICK FLAT PLATE SHOULD THEN BE PLACED OVER THE CHANNEL TO COMPLETE THE SPACER AND BE FULL WELD.

STEP 11
THE HASP SHOULD THEN BE WELDED TO THE SHIM PAD. 1 - 4 1/4 IN. FILLET WELDS SHOULD BE PLACED ALONG THE TOP AND BOTTOM OF THE SHIM PAD TUBES.

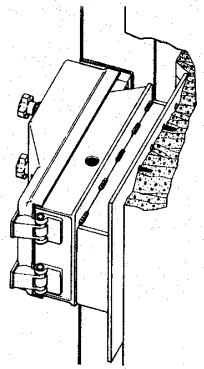

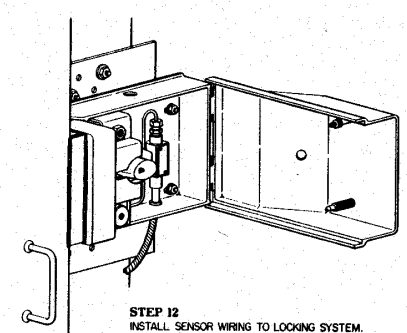

STEP 12
INSTALL SENSOR WIRING TO LOCKING SYSTEM.

FIND NO.	QTY REQ	CODE IDENT	PART, DRAWING OR SPEC NO.	NOMENCLATURE/DESCRIPTION	REMARKS

PARTS LIST

SYMBOLS: ITEM; WELD ITEM; ITEM NO.; ITEM CALLOUT; SHEET NO.; WELD ITEM CALLOUT

DO NOT SCALE DRAWING
UNLESS OTHERWISE SPECIFIED DIMENSIONS ARE IN INCHES.
TOLERANCES:
XX DECIMALS ±
XXX DECIMALS ±
FRACTIONS ±
ANGLES ±
SCALE:

INITIALS | DATE
EXAMINED
EXAMINED
SAFETY
ENGINEER
CHECKED
ENGINEERING DESIGN
APPROVED 1/13/86 19 85

NAVAL AMMUNITION PRODUCTION ENGINEERING CENTER CRANE, IN 47522
DEPARTMENT OF THE NAVY NAVAL SEA SYSTEMS COMMAND WASHINGTON DC 20362

UNIVERSAL SECURITY SYSTEM
Sliding Door Installation Procedures

OVAL ARCH MAGAZINE

SIZE F | CODE IDENT NO. 53711 | NAVSEA DWG NO. 5532345
SHEET 3 OF 3

NEXT ASSY | USED ON
APPLICATION

REVISION STATUS OF SHEETS			
SHEET NO	1	2	3
REVISION	A	B	A

REVISIONS					
ZONE	LTR	DESCRIPTION	DATE	APPROVAL	
C5	A	CHANGED TANG	5/22/88		

NOTES
1. INTERPRET DRAWING IN ACCORDANCE WITH DOD-STD-100.
2. REMOVE BURRS AND SHARP EDGES
3. S&G MODEL 6815 OR NAPEC STYLE 3 DUAL CONTROL LOCK MAY BE USED TO SECURE THE UNIVERSAL SECURITY SYSTEM.

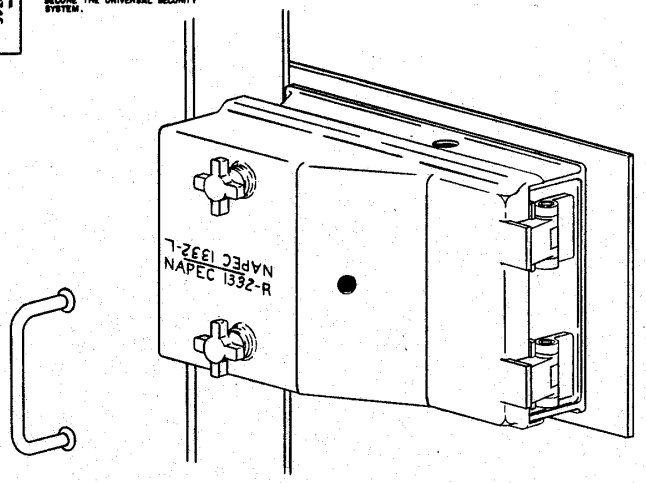

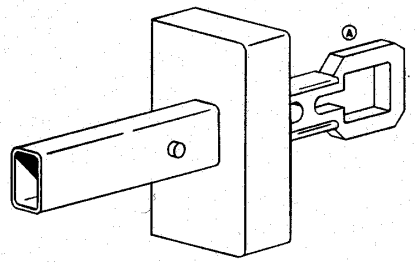

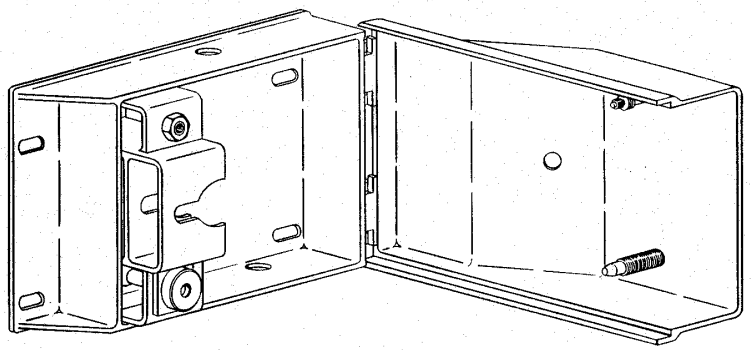

FIND NO.	QTY REQ	CODE IDENT	PART, DRAWING OR SPEC NO.	NOMENCLATURE/DESCRIPTION	REMARKS

PARTS LIST

NEXT ASSY	USED ON
APPLICATION	

SYMBOLS: ITEM; FIELD ITEM; ITEM CALLOUT; FIELD ITEM CALLOUT

DO NOT SCALE DRAWING
UNLESS OTHERWISE SPECIFIED DIMENSIONS ARE IN INCHES
TOLERANCES
XX DECIMALS ±
XXX DECIMALS ±
FRACTIONS ±
ANGLES ±
SCALE NOTE

	INITIALS	DATE
EXAMINED		
EXAMINED		
SAFETY		
ENGINEER		
CHECKED		
DESIGNED		
DRAWN		

APPROVED: DAVE B. 10 JUL 87

NAVAL AMMUNITION PRODUCTION ENGINEERING CENTER CRANE, IN 47522

DEPARTMENT OF THE NAVY NAVAL SEA SYSTEMS COMMAND WASHINGTON, DC 20362

UNIVERSAL SECURITY SYSTEM INSTALLATION PROCEDURE FOR SLIDING DOOR; RIGHT-SIDE MOUNT

SIZE F | CODE IDENT NO. 53711 | NAVSEA DWG NO. 5532346 | SHEET 3 OF 3

REVISIONS				
ZONE	LTR	DESCRIPTION	DATE	D C B APPROVAL
F2	A	CHANGED TANG	23 JUL 84	
	B	SEE NOR 5532346 B	2 SEP 84	

NOTES
1. INTERPRET DRAWING IN ACCORDANCE WITH DOD STD 100.
2. REMOVE BURRS AND SHARP EDGES

NAVSEA DWG NO. 5532346 SHEET 2 OF 3

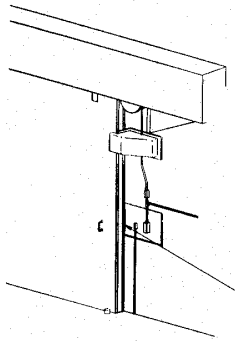

STEP 1
OPEN AND CLOSE MAGAZINE DOOR SEVERAL TIMES NOTING POSITION OF DOOR EACH TIME IT STOPS IN CLOSED POSITION. MARK THIS POSITION ON HEADWALL. REMOVE ANY OBSTRUCTIONS FROM MAGAZINE HEADWALL IN AREA APPROXIMATELY 2' RIGHT OF DOOR (IN CLOSED POSITION) AND AT A HEIGHT 3' TO 5' ABOVE MAGAZINE APRON.

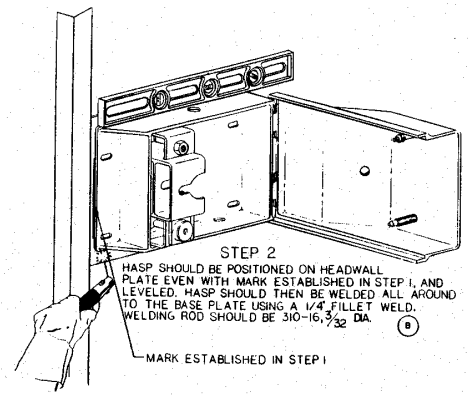

STEP 2
HASP SHOULD BE POSITIONED ON HEADWALL PLATE EVEN WITH MARK ESTABLISHED IN STEP 1, AND LEVELED. HASP SHOULD THEN BE WELDED ALL AROUND TO THE BASE PLATE USING A 1/4" FILLET WELD. WELDING ROD SHOULD BE 310-16, 3/32 DIA. (B)

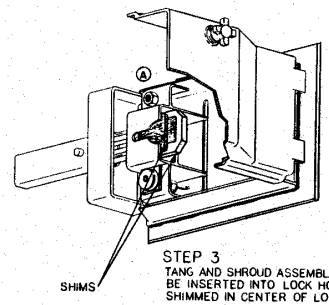

STEP 3
TANG AND SHROUD ASSEMBLY SHOULD THEN BE INSERTED INTO LOCK HOUSING AND TANG SHIMMED IN CENTER OF LOCK HOUSING.

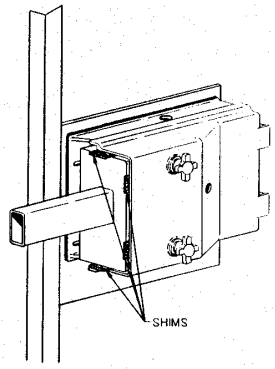

STEP 4
CLOSE COVER AND FASTEN SECURELY USING TWO JACKSCREWS. INSERT WOODEN SHIM BETWEEN SHROUD AND COVER AS SHOWN TO CENTER SHROUD ASSEMBLY.

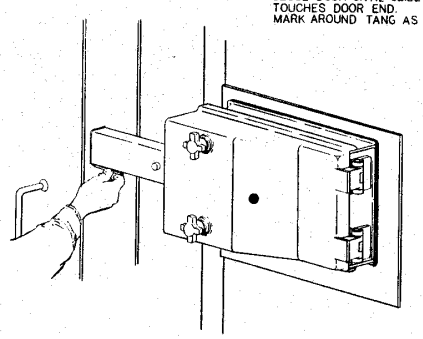

STEP 5
CLOSE DOOR UNTIL SLIDE TUBE TOUCHES DOOR END. MARK AROUND TANG AS SHOWN.

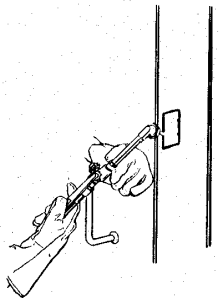

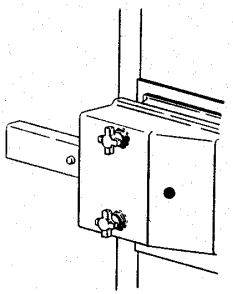

STEP 6
OPEN DOOR AND CUT OUT MARKED PANEL.

FIND NO.	QTY REQ	CODE IDENT	PART, DRAWING OR SPEC NO.	NOMENCLATURE/DESCRIPTION	REMARKS

PARTS LIST

NEXT ASSY	USED ON
APPLICATION	

SYMBOLS: (1) ITEM; (F) FIELD ITEM; ITEM (1) ITEM CALLOUT; SHEET 2 (F) FIELD ITEM CALLOUT

DO NOT SCALE DRAWING
UNLESS OTHERWISE SPECIFIED, DIMENSIONS ARE IN INCHES
TOLERANCES
XX DECIMALS ±
XXX DECIMALS ±
FRACTIONS ±
ANGLES ±

SCALE: NONE

	INITIALS	DATE
EXAMINED		
EXAMINED		
SAFETY		
ENGINEER		
CHECKED		
SERVICING REPAIR		

APPROVED 26 JUL 83

NAVAL AMMUNITION PRODUCTION ENGINEERING CENTER CRANE, IN 47522

DEPARTMENT OF THE NAVY NAVAL SEA SYSTEMS COMMAND WASHINGTON, DC 20362

UNIVERSAL SECURITY SYSTEM INSTALLATION PROCEDURE FOR SLIDING DOOR; RIGHT-SIDE MOUNT

SIZE F | CODE IDENT NO. 53711 | NAVSEA DWG NO. 5532346 | SHEET 2 OF 3

REVISIONS					
ZONE	LTR	DESCRIPTION	DATE	D	C	B
F7		CHANGED TANG				
F4	A	CHANGED TANG and LOCK				

NOTES
1. INTERPRET DRAWING IN ACCORDANCE WITH DOD STD-100.
2. REMOVE BURRS AND SHARP EDGES

NAVSEA 5532346 SHEET 3 OF 3

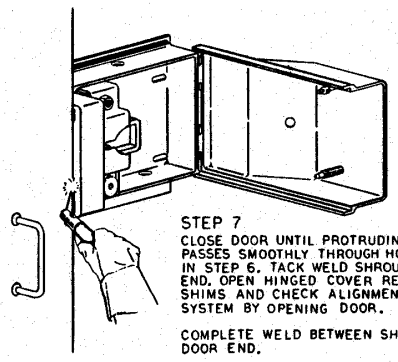

STEP 7
CLOSE DOOR UNTIL PROTRUDING TUBE PASSES SMOOTHLY THROUGH HOLE CUT IN STEP 6. TACK WELD SHROUD TO DOOR END. OPEN HINGED COVER RELEASING SHIMS AND CHECK ALIGNMENT OF SYSTEM BY OPENING DOOR.

COMPLETE WELD BETWEEN SHROUD AND DOOR END.

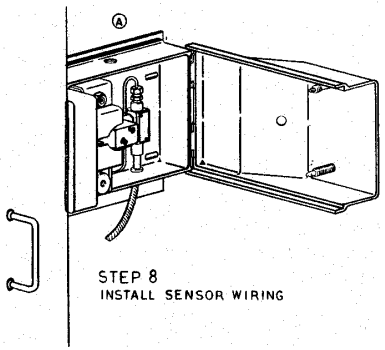

STEP 8
INSTALL SENSOR WIRING

FIND NO.	QTY REQ	CODE IDENT	PART, DRAWING OR SPEC NO.	NOMENCLATURE/DESCRIPTION	REMARKS

PARTS LIST

NEXT ASSY	USED ON
APPLICATION	

SYMBOLS: ITEM; WELD ITEM; ITEM CALLOUT; WELD ITEM CALLOUT

DO NOT SCALE DRAWING
UNLESS OTHERWISE SPECIFIED, DIMENSIONS ARE IN INCHES
TOLERANCES
XX DECIMALS ±
XXX DECIMALS ±
FRACTIONS ±
ANGLES ±

	INITIALS	DATE
EXAMINED		
EXAMINED		
SAFETY		
ENGINEER		
CHECKED		
REQUIRED BY		

APPROVED 14 B. 1983

SCALE NONE

NAVAL AMMUNITION PRODUCTION ENGINEERING CENTER CRANE, IN 47522

DEPARTMENT OF THE NAVY NAVAL SEA SYSTEMS COMMAND WASHINGTON, DC 20362

UNIVERSAL SECURITY SYSTEM
INSTALLATION PROCEDURE FOR
SLIDING DOOR; RIGHT-SIDE MOUNT

SIZE F | CODE IDENT NO. 53711 | NAVSEA DWG NO. 5532346

SHEET 3 OF 3

NAVSEA DWG NO 5532347 SHEET 1 OF 3

NOTES

1. INTERPRET DRAWING IN ACCORDANCE WITH DOD-STD-100.
2. REMOVE BURRS AND SHARP EDGES
3. S&G MODEL 831B OR NAPEC STYLE 3 DUAL CONTROL LOCK MAY BE USED TO SECURE THE UNIVERSAL SECURITY SYSTEM.

REVISION STATUS OF SHEETS			
SHEET NO.	1	2	3
REVISION	A	B	A

REVISIONS					
ZONE	LTR	DESCRIPTION	DATE	APPROVAL	
C4	A	CHANGED TANG			

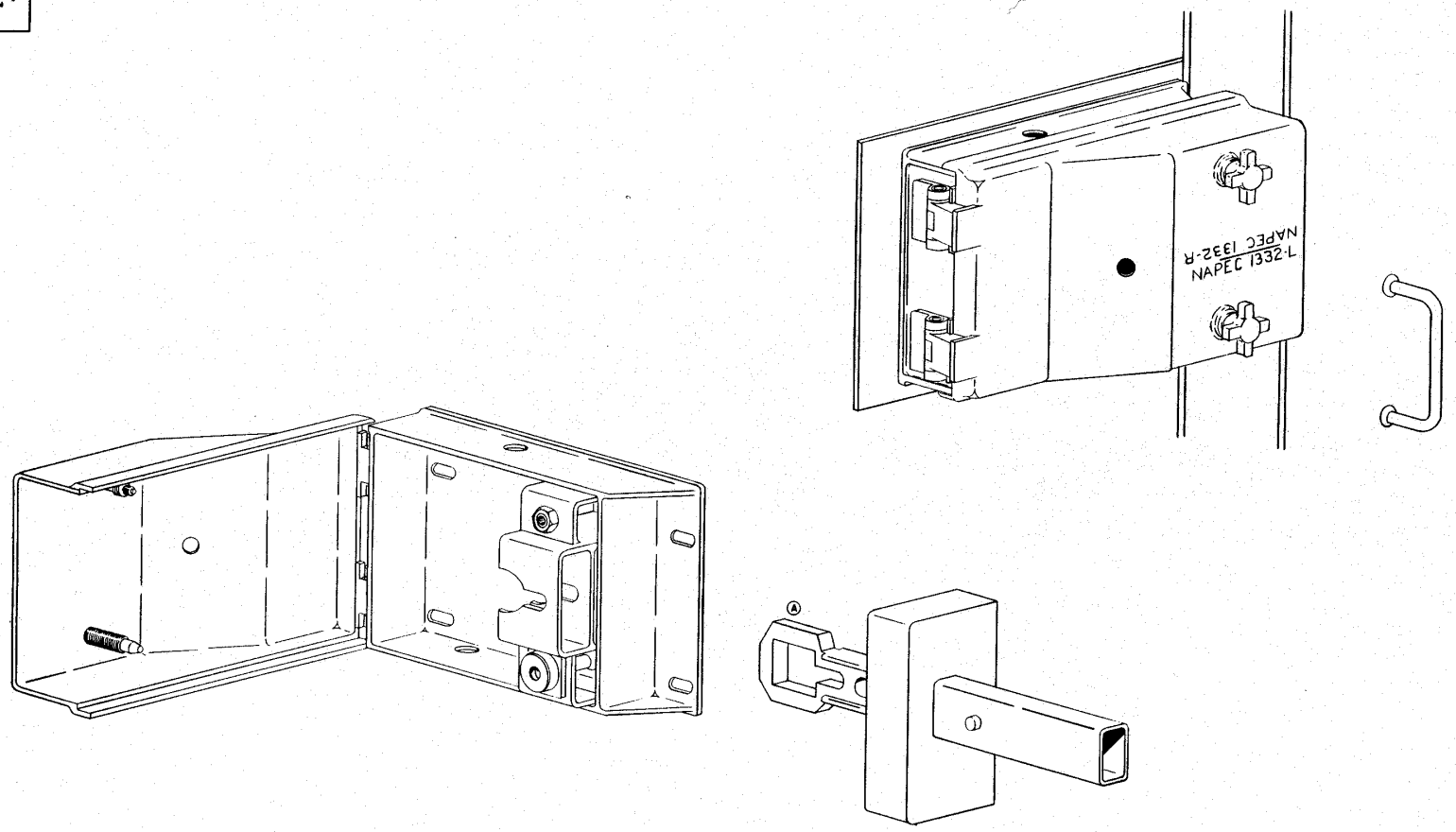

FIND NO.	QTY REQ	CODE IDENT	PART, DRAWING OR SPEC NO.	NOMENCLATURE/DESCRIPTION	REMARKS

PARTS LIST

NEXT ASSY	USED ON
APPLICATION	

SYMBOLS: ITEM; WELD ITEM; ITEM CALLOUT; WELD ITEM CALLOUT

DO NOT SCALE DRAWING

UNLESS OTHERWISE SPECIFIED, DIMENSIONS ARE IN INCHES.

TOLERANCES:
XX DECIMALS ±
XXX DECIMALS ±
FRACTIONS ±
ANGLES ±

SCALE: NONE

	INITIALS	DATE
EXAMINED		
EXAMINED		
SAFETY		
ENGINEER		
CHECKED		
DESIGNED DRAWN		

APPROVED MAR 8 1983

NAVAL AMMUNITION PRODUCTION ENGINEERING CENTER CRANE, IN 47522

DEPARTMENT OF THE NAVY NAVAL SEA SYSTEMS COMMAND WASHINGTON, DC 20362

UNIVERSAL SECURITY SYSTEM INSTALLATION PROCEDURE FOR SLIDING DOOR; LEFT-SIDE MOUNT

SIZE F | CODE IDENT NO. 53711 | NAVSEA DWG NO. 5532347

SHEET 1 OF 3

ZONE	LTR	REVISIONS DESCRIPTION	DATE	APPROVAL
C6	A	CHANGED TANG	[illegible]	[illegible]
	B	SEE NOR 5532347 B	[illegible]	[illegible]

NOTES
1. INTERPRET DRAWING IN ACCORDANCE WITH DOD-STD-100.
2. REMOVE BURRS AND SHARP EDGES

NAVSEA 5532347 SHEET 2 OF 3

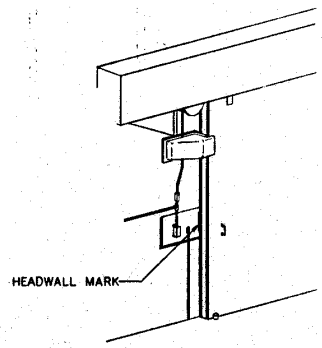

STEP 1
OPEN AND CLOSE MAGAZINE DOOR SEVERAL TIMES NOTING THE POSITION OF THE DOOR EACH TIME IT STOPS IN THE CLOSED POSITION. MARK THIS POSITION ON THE HEADWALL. REMOVE ANY OBSTRUCTIONS FROM THE MAGAZINE HEADWALL IN AREA APPROXIMATELY 2' LEFT OF THE DOOR (IN CLOSED POSITION) AND AT A HEIGHT 3' TO 5' ABOVE THE MAGAZINE OR APRON.

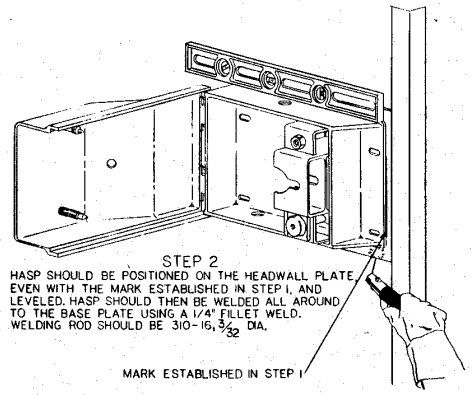

STEP 2
HASP SHOULD BE POSITIONED ON THE HEADWALL PLATE, EVEN WITH THE MARK ESTABLISHED IN STEP 1, AND LEVELED. HASP SHOULD THEN BE WELDED ALL AROUND TO THE BASE PLATE USING A 1/4" FILLET WELD. WELDING ROD SHOULD BE 310-16, 3/32 DIA.

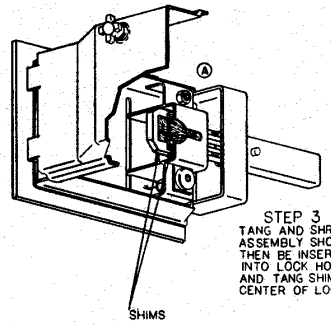

STEP 3
TANG AND SHROUD ASSEMBLY SHOULD THEN BE INSERTED INTO LOCK HOUSING AND TANG SHIMMED IN CENTER OF LOCK HOUSING.

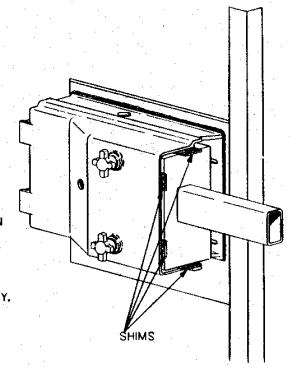

STEP 4
CLOSE COVER AND FASTEN SECURELY USING TWO JACKSCREWS.
INSERT WOODEN SHIM BETWEEN SHROUD AND COVER AS SHOWN TO CENTER SHROUD ASSEMBLY.

FIND NO.	QTY REQ	CODE IDENT	PART, DRAWING OR SPEC NO.	NOMENCLATURE/DESCRIPTION	REMARKS

PARTS LIST

NEXT ASSY	USED ON
APPLICATION	

SYMBOLS: ITEM; WELD ITEM; ITEM CALLOUT; WELD ITEM CALLOUT

DO NOT SCALE DRAWING
UNLESS OTHERWISE SPECIFIED, DIMENSIONS ARE IN INCHES
TOLERANCES: XX DECIMALS ± XXX DECIMALS ± FRACTIONS ± ANGLES ±

SCALE: NONE

	INITIALS	DATE
EXAMINED		
EXAMINED		
SAFETY		
ENGINEER		
CHECKED		
DESIGNED		
APPROVED	[illegible]	[illegible]

NAVAL AMMUNITION PRODUCTION ENGINEERING CENTER CRANE, IN 47522

DEPARTMENT OF THE NAVY NAVAL SEA SYSTEMS COMMAND WASHINGTON, DC 20362

UNIVERSAL SECURITY SYSTEM
INSTALLATION PROCEDURE FOR
SLIDING DOOR; LEFT-SIDE MOUNT

SIZE F | CODE IDENT NO. 53711 | NAVSEA DWG NO. 5532347

SHEET 2 OF 3

REVISIONS				D	C	B
ZONE	LTR	DESCRIPTION	DATE	APPROVAL		
C6		CHANGED TANG				
C2	A	CHANGED TANG & LOCK	[illegible]	[illegible]	[illegible]	[illegible]

NOTES
1. INTERPRET DRAWING IN ACCORDANCE WITH DOD-STD-100.
2. REMOVE BURRS AND SHARP EDGES

NAVSEA DRAWING NO. 5532347
SHEET 3 OF 3

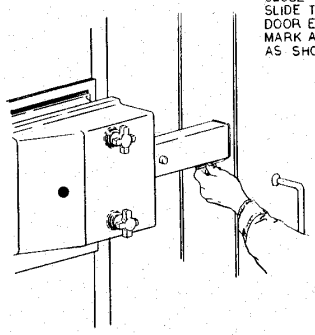

STEP 5
CLOSE DOOR UNTIL SLIDE TUBE TOUCHES DOOR END.
MARK AROUND TANG AS SHOWN.

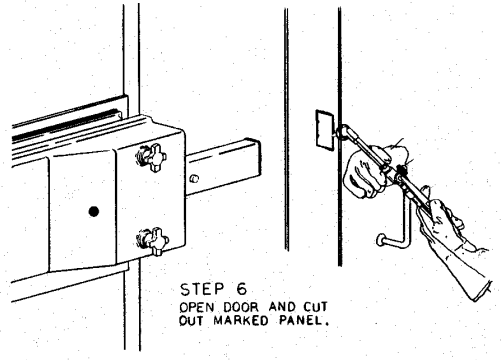

STEP 6
OPEN DOOR AND CUT OUT MARKED PANEL.

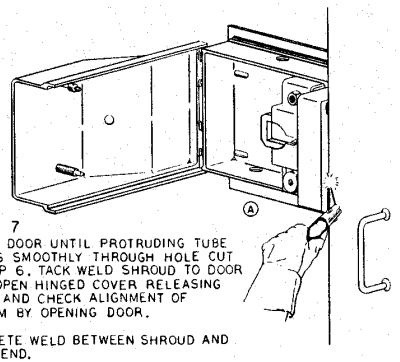

STEP 7
CLOSE DOOR UNTIL PROTRUDING TUBE PASSES SMOOTHLY THROUGH HOLE CUT IN STEP 6. TACK WELD SHROUD TO DOOR END. OPEN HINGED COVER RELEASING SHIMS AND CHECK ALIGNMENT OF SYSTEM BY OPENING DOOR.

COMPLETE WELD BETWEEN SHROUD AND DOOR END.

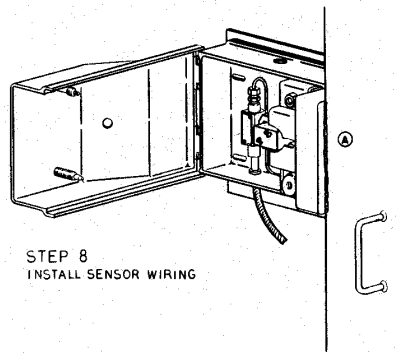

STEP 8
INSTALL SENSOR WIRING

FIND NO.	QTY REQ	CODE IDENT	PART, DRAWING OR SPEC NO.	NOMENCLATURE/DESCRIPTION	REMARKS

PARTS LIST

NEXT ASSY	USED ON
APPLICATION	

SYMBOLS: ITEM; WELD ITEM; ITEM CALLOUT; WELD ITEM CALLOUT

DO NOT SCALE DRAWING
UNLESS OTHERWISE SPECIFIED DIMENSIONS ARE IN INCHES.
TOLERANCES: XX DECIMALS ±; XXX DECIMALS ±; FRACTIONS ±; ANGLES ±
SCALE NONE

	INITIALS	DATE
EXAMINED		
EXAMINED		
SAFETY		
ENGINEER		
CHECKED		
DESIGNED		
APPROVED	[illegible]	19 [illegible]

NAVAL AMMUNITION PRODUCTION ENGINEERING CENTER CRANE, IN 47522

DEPARTMENT OF THE NAVY NAVAL SEA SYSTEMS COMMAND WASHINGTON, DC 20362

UNIVERSAL SECURITY SYSTEM INSTALLATION PROCEDURE FOR SLIDING DOOR; LEFT-SIDE MOUNT

SIZE	CODE IDENT NO.	NAVSEA	DWG NO.
F	53711		5532347

SHEET 3 OF 3

NOTICE: THE CONTENTS AND DESIGN DETAIL OF THE DRAWING WERE DEVELOPED BY THE NAVAL AMMUNITION PRODUCTION ENGINEERING CENTER AND ARE UNITED STATES GOVERNMENT PROPERTY

NAPEC DRAWING NO. 1369 SHEET 1 OF 1

NOTES
1. INTERPRET DRAWING IN ACCORDANCE WITH DOD-STD-100.
2. REMOVE BURRS AND SHARP EDGES

(1) OF NAPEC DWG NO: 1369
NAME: ANTI-ROTATION BLOCK
MATL: INVESTMENT CASTING STAINLESS STEEL 304L (CF-3)
SURF REQT: NAS-823/C-25
SPCL NOTE: ALL RADII 1/32 EXCEPT AS NOTED
SCALE: 1/1

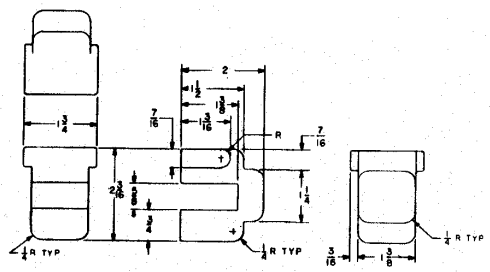

(2) OF NAPEC DWG NO: 1369
NAME: INSTALLATION JIG
MATL: POLYETHELENE 1.7 TO 2 LB/FT³ DENSITY
SPCL NOTE: HOT WIRE CUT PERMISSIBLE, ALL TOLERANCES +1/32, -0.
SCALE: 1/1

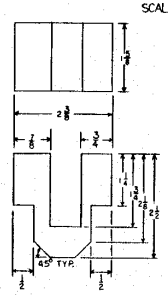

ZONE	LTR	REVISIONS DESCRIPTION	DATE	D	C	E APPROVAL

NOTE: ONE SET CONSISTS OF 2 EACH PARTS 1369-1 AND 1369-2

FIND NO.	QTY REQ	CODE IDENT	PART, DRAWING OR SPEC NO.	NOMENCLATURE/DESCRIPTION	REMARKS

PARTS LIST

NEXT ASSY	USED ON
	5532335
	5532334
	0958
	0957

APPLICATION

SYMBOLS: (1) ITEM; (1) WELD ITEM; (1) ITEM CALLOUT; (1) WELD ITEM CALLOUT

DO NOT SCALE DRAWING
UNLESS OTHERWISE SPECIFIED DIMENSIONS ARE IN INCHES
TOLERANCES: XX DECIMALS ±; XXX DECIMALS ±; FRACTIONS ± 1/64; ANGLES ±
SCALE: 1/1

	INITIALS	DATE
EXAMINED		
EXAMINED		
SAFETY		
ENGINEER	[illegible]	4/8/81
CHECKED		
DESIGNED DRAWN		

APPROVED 4 / 8 19 81 [signature]

NAVAL AMMUNITION PRODUCTION ENGINEERING CENTER CRANE, IN 47522

DEPARTMENT OF THE NAVY NAVAL SEA SYSTEMS COMMAND WASHINGTON, DC 20362

ANTI-ROTATION BLOCK FOR HIGH SECURITY HASP

SIZE F | CODE IDENT NO. 53711 | NAVAMPROENGCEN DWG NO. 5532350

SHEET 1 OF 1